PIONEER PUMP

DIESEL-DRIVEN
PUMP PACKAGES

Franklin Electric

DIESEL-DRIVEN PUMP PACKAGES

OPEN PACKAGES 2

PP44S10L71-D2.9L4 2
PP64S12L71-TD2.9L4 4
PP66S12L71-TD2.9L4 6
PP66S12L71-4045TFC03 8
PP1212S17L71-1706J-E93TA 10

SOUND-ATTENUATED PACKAGES 12

SAPP44S10L71-D2.9L4 12
SAPP44V10L72-D2.9L4 14
SAPP64S12L71-TD2.9L4 16
SAPP64S12L71-4045TFC03 18
SAPP66S12L71-TD2.9L4 20
SAPP66S12L71-4045TFC03 22
SAPP66V12L72-TD2.9L4 24
SAPP88S12L71-4045HFC04 26
SAPP1212S17L71-1706J-E93TA 28
SAPP1414S17L71-1706J-E93TA 30
SAPP1414S17L71-1206F-E70TTA 32

For the most up-to-date product information, visit **pioneerpump.com**.

MENU

PIONEER PUMP

Pioneer Prime Diesel-Driven Centrifugal Pump Trailer Package

PP44S10L71-D2.9L4

PUMP SPECIFICATIONS

Size	4" x 4" (100 x 100 mm)
Impeller Diameter	10" (254 mm)
Max Flow	1,520 gpm (345 m^3/h)
Max Head	155 feet (47 meters)
Solids Size	3" (76 mm)
Max. Operating Temp.	200 °F (93 °C)
Max. Operating Press.	260 psi (1800 kPa)

ENGINE SPECIFICATIONS

FT4 Engine Type	Deutz D2.9L, 4-Cylinder Diesel
Displacement	177 cu. in. (2.9 l)
Fuel Consumption	2.07 gph (7.83 l/h) @ 1800 rpm
Continuous HP	36 HP (27 kW) @ 1800 rpm
Peak Intermittent HP Rating	49 HP (36.5 kW)
FT4 Specifics (Def or No Def, DOC, SCR, etc.)	DOC
Instrument Panel	Oil pressure gauge, voltmeter, hourmeter, tachometer

PIONEER PRIME PRIMING SYSTEM

Priming System	Mechanically driven diaphragm-style vacuum pump
Air Removal Cap.	50 cfm (.02 cms)
Priming Chamber	Positive sealing air separation w/stainless steel components
Discharge Check Valve	Swing style; ductile iron w/nitrile disc
Run Dry System	Oil-lubricated mech. seal allows pump to run completely dry without damage

FEATURES AND BENEFITS

- Indefinite run-dry capability
- Extreme flow technology
- Environmentally safe priming system: Pioneer Prime
- Auto-start controls
- Skid options available

PARTS KITS

Mechanical Seal Kit: 372000109
Bearing Frame Kit: 37300107
Priming Chamber Assembly: 1060015894
Upper Vacuum Kit: 374000102
Lower Vacuum Kit: 374000103

PACKAGE SPECIFICATIONS

Fuel Capacity	75 gal (284 L)
Control Panel	LOFA CP750
Operating Speed (Min. / Max.)	1,000 / 2,200 rpm
Weight (Dry / Wet)	3,000 lbs / 3,533 lbs
Instrument Compatibility	High/low level floats, transducers
Trailer Brakes	Electric
Optional Adders	Surge breaks, corner jacks, tongue-mounted tool box, wheel chocks, exterior lighting, solar or 120VAC trickle charger
Telemetry Ready	Options available

MATERIALS OF CONSTRUCTION

Material	**Standard Construction**
Impeller	CA6NM Stainless Steel
Shaft	17-4 PH Stainless Steel
Wear Ring	ASTM A48 Class 40 Gray Iron
Suction Cover	Ductile Iron ASTM A536 65-45-12
Volute	Ductile Iron ASTM A536 65-45-12
Brac-Plate/Bracket	Ductile Iron ASTM A536 65-45-12
Mechanical Seal	Silicon Carbide rotating and Tungsten Carbide stationary

Franklin Electric

PIONEER PUMP

MECHANICAL DIMENSIONS

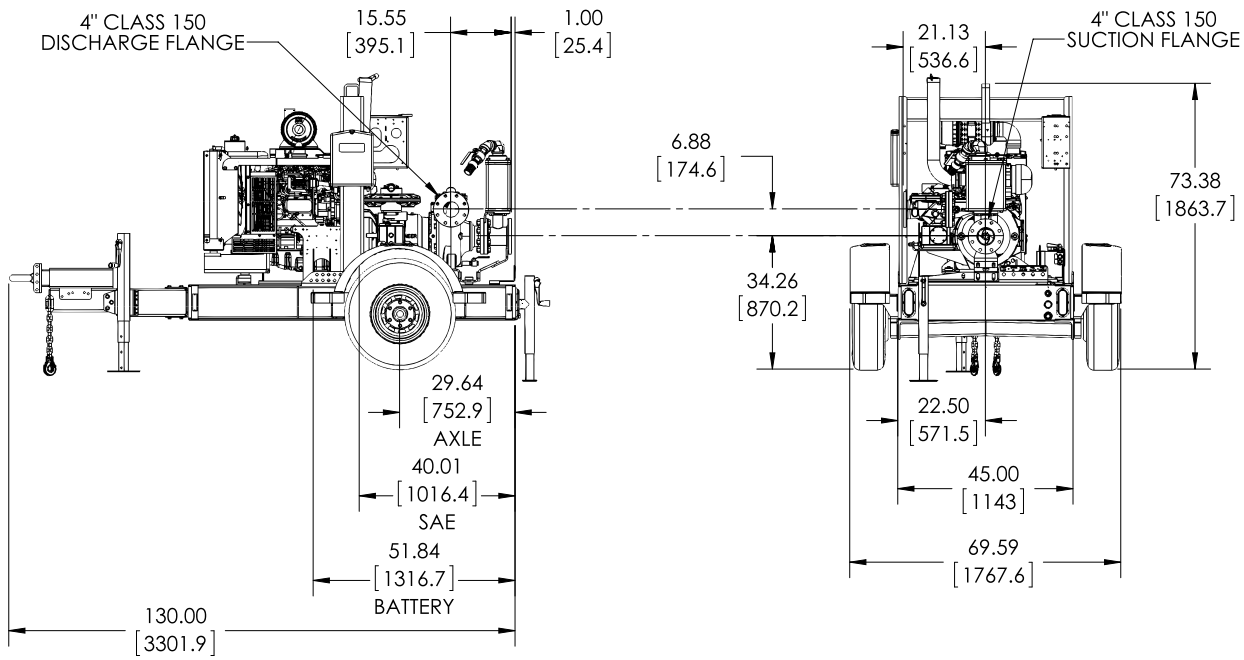

PERFORMANCE CURVE

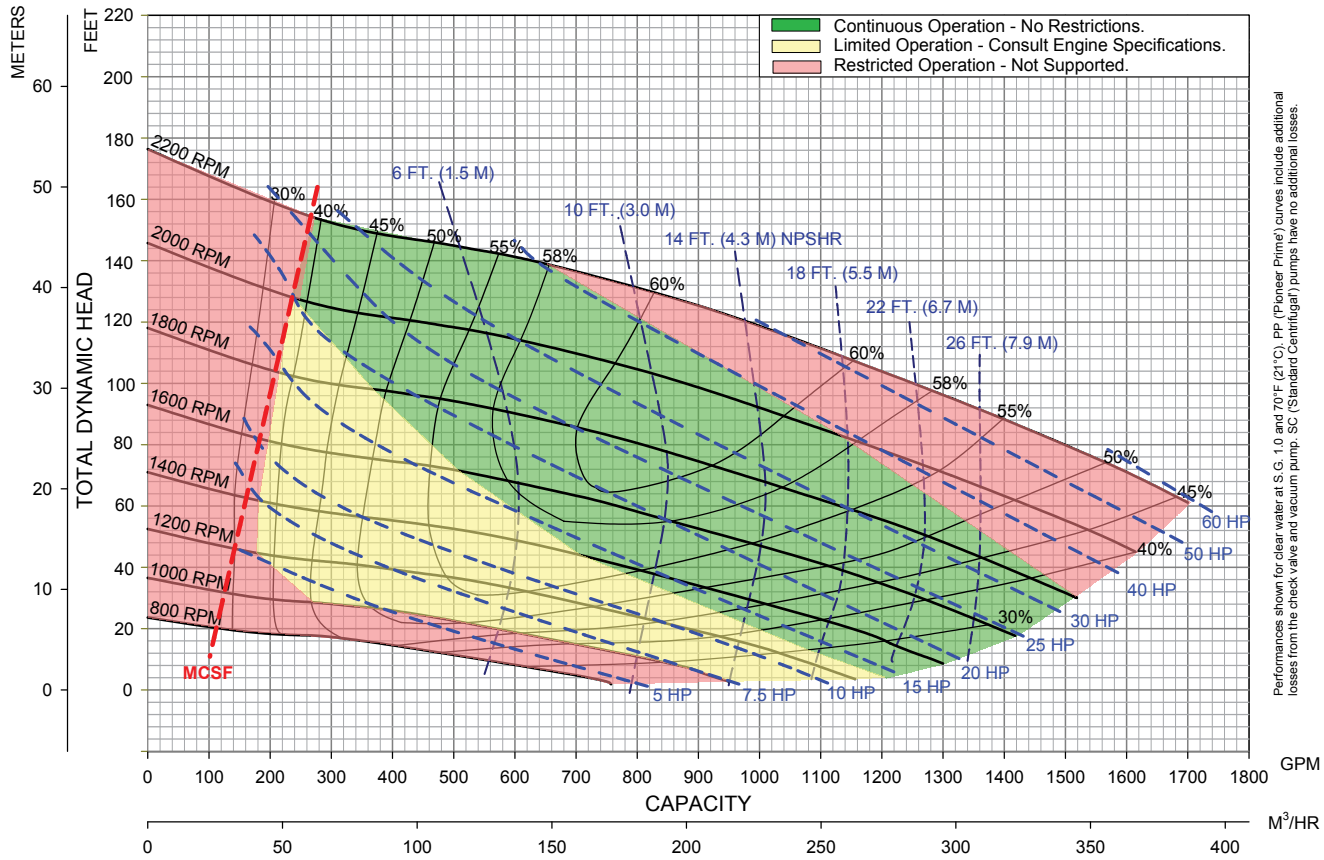

MENU

PIONEER PUMP

Pioneer Prime Diesel-Driven Centrifugal Pump Skid Package

PP64S12L71-TD2.9L4

PUMP SPECIFICATIONS

Size	6" x 4" (150 x 100 mm)
Impeller Diameter	12" (305 mm)
Max Flow	1,830 gpm (499 m^3/h)
Max Head	265 feet (80 meters)
Solids Size	3" (76 mm)
Max. Operating Temp.	200 °F (93 °C)
Max. Operating Press.	260 psi (1800 kPa)

ENGINE SPECIFICATIONS

FT4 Engine Type	Deutz TD2.9L, 4-Cylinder Diesel
Displacement	177 cu. in. (2.9 l)
Fuel Consumption	1.95 gph (7.38 l/h) @ 1800 rpm
Continuous HP	58 HP (43 kW) @ 1800 rpm
Peak HP Rating	75 HP (55 kW)
FT4 Specifics (Def or No Def, DOC, SCR, etc.)	DOC
Safety Shut-Down Switches	Low oil press., high temp., v-belt failure
Instrument Panel	Oil pressure gauge, ampmeter, hourmeter, tachometer

PIONEER PRIME PRIMING SYSTEM

Priming System	Mechanically driven diaphragm-style vacuum pump
Air Removal Cap.	50 cfm (.02 cms)
Priming Chamber	Positive sealing air separation w/stainless steel components
Discharge Check Valve	Swing style; ductile iron w/nitrile disc
Run Dry System	Oil-lubricated mech. seal allows pump to run completely dry without damage

FEATURES AND BENEFITS

- Indefinite run-dry capability
- Extreme flow technology
- Environmentally safe priming system: Pioneer Prime
- Auto-start controls
- Trailer options available

OPTIONS AND ACCESSORIES

Parts Kits No.	Mechanical Seal Kit: 372000154 | Bearing Frame Kit: 373000146
Instrument Compatibility	Transducer
Telemetry Ready	Options Available

PACKAGE SPECIFICATIONS

Fuel Capacity	75 gal (284 L)
Control Panel	LOFA CP750
Operating Speed (Min. / Max.)	1,000 / 2,200 rpm
Weight (Dry / Wet)	3,200 lbs / 3,720 lbs
Instrument Compatibility	High/low level floats
Optional Adders	Exterior lighting, solar or 120VAC trickle charger

MATERIALS OF CONSTRUCTION

Material	**Standard Construction**
Impeller	CA6NM Stainless Steel
Shaft	17-4 PH Stainless Steel
Wear Ring	ASTM A48 Class 40 Gray Iron
Suction Cover	Ductile Iron ASTM A536 65-45-12
Volute	Ductile Iron ASTM A536 65-45-12
Brac-Plate/Bracket	Ductile Iron ASTM A536 65-45-12
Mechanical Seal	Silicon Carbide rotating and Tungsten Carbide stationary

Franklin Electric

PIONEER PUMP

MECHANICAL DIMENSIONS

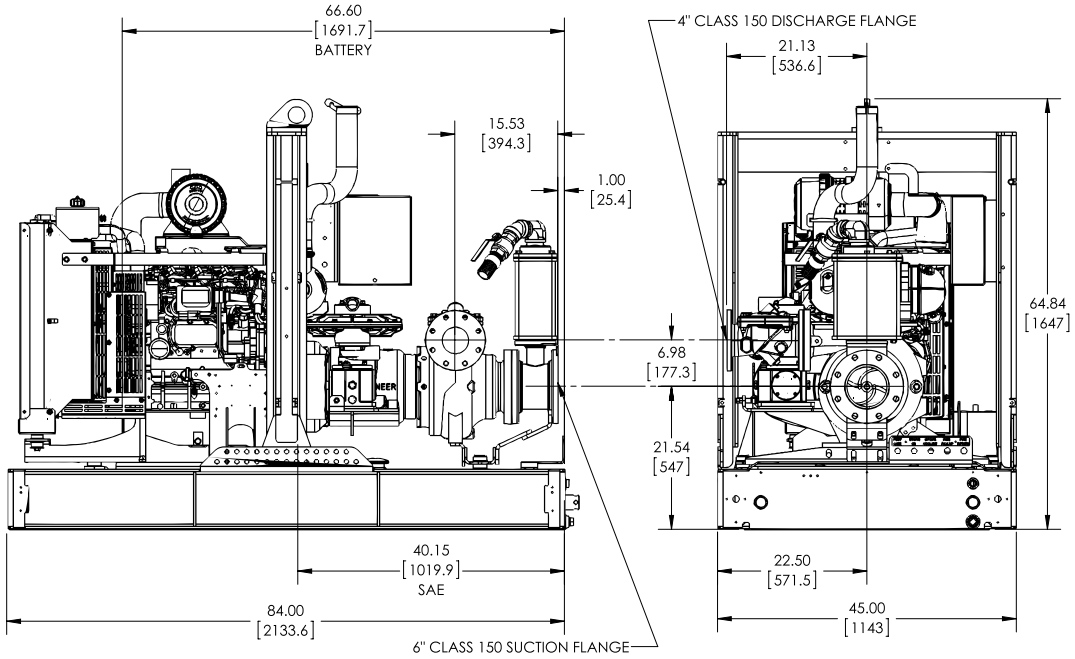

PERFORMANCE CURVE

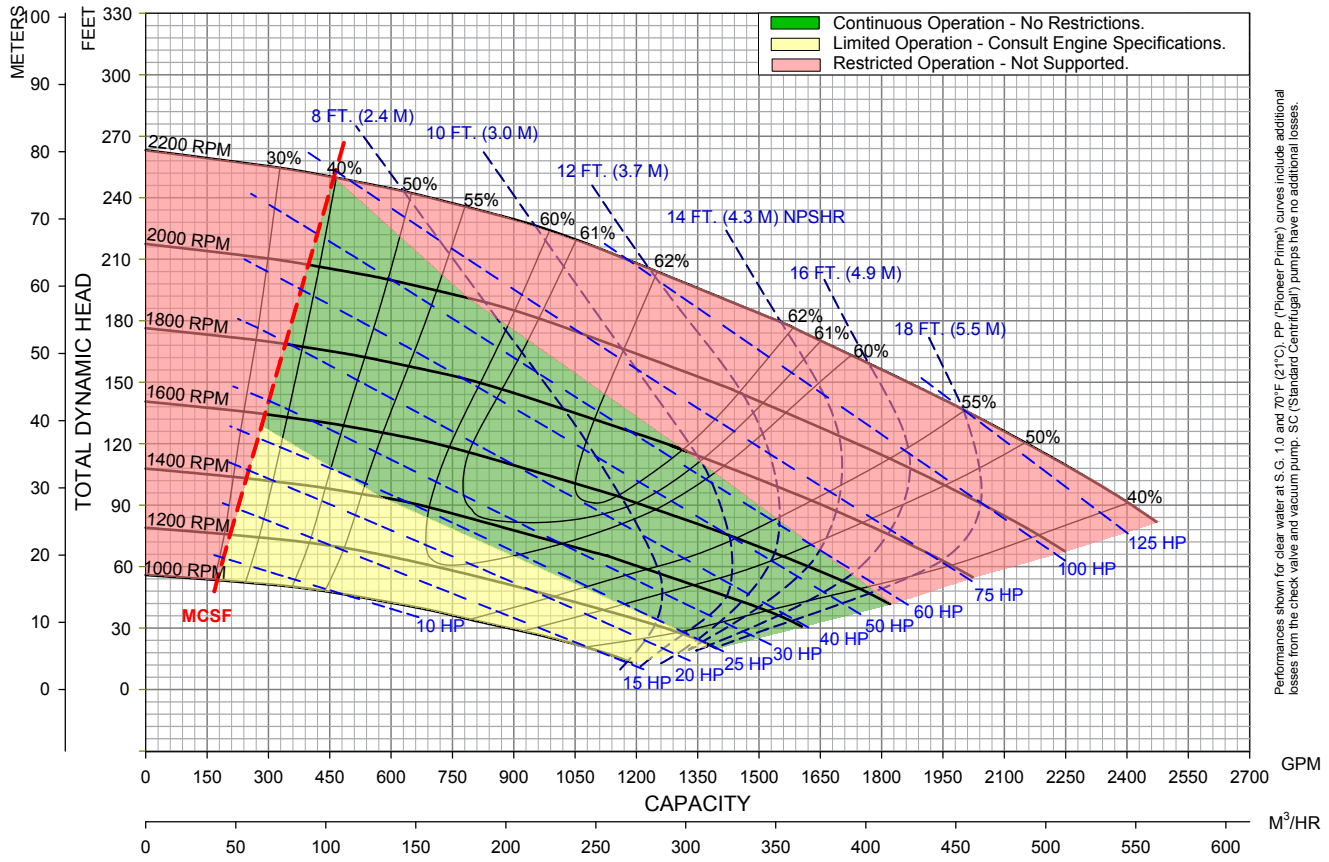

MENU

PIONEER PUMP

Pioneer Prime Diesel-Driven Centrifugal Pump Trailer Package

PP66S12L71-TD2.9L4

PUMP SPECIFICATIONS

Size	6" x 6" (150 x 150 mm)
Impeller Diameter	11" (279 mm)
Max Flow	2,850 gpm (647 m^3/h)
Max Head	195 feet (59 meters)
Solids Size	3" (76 mm)
Max. Operating Temp.	200 °F (93 °C)
Max. Operating Press.	260 psi (1800 kPa)

ENGINE SPECIFICATIONS

FT4 Engine Type	Deutz TD2.9L, 4-Cylinder Diesel
Displacement	177 cu. in. (2.9 l)
Fuel Consumption	1.95 gph (7.38 l/h) @ 1800 rpm
Continuous HP	58 HP (43 kW) @ 1800 rpm
Peak HP Rating	75 HP (55 kW)
FT4 Specifics (Def or No Def, DOC, SCR, etc.)	DOC
Safety Shut-Down Switches	Low oil press., high temp., v-belt failure
Instrument Panel	Oil pressure gauge, ampmeter, hourmeter, tachometer

PIONEER PRIME PRIMING SYSTEM

Priming System	Mechanically driven diaphragm-style vacuum pump
Air Removal Cap.	50 cfm (.02 cms)
Priming Chamber	Positive sealing air separation w/stainless steel components
Discharge Check Valve	Swing style; ductile iron w/nitrile disc
Run Dry System	Oil-lubricated mech. seal allows pump to run completely dry without damage

FEATURES AND BENEFITS

- Indefinite run-dry capability
- Extreme flow technology
- Environmentally safe priming system: Pioneer Prime
- Auto-start controls
- Skid options available

OPTIONS AND ACCESSORIES

Parts Kits No.	Mechanical Seal Kit: 372000101 | Bearing Frame Kit: 37300100
Instrument Compatibility	Transducer
Telemetry Ready	Options Available

PACKAGE SPECIFICATIONS

Fuel Capacity	75 gal (284 L)
Control Panel	LOFA CP750
Operating Speed (Min. / Max.)	1,000 / 2,200 rpm
Instrument Compatibility	High/low level floats
Trailer Brakes	Electric
Optional Adders	Surge breaks, corner jacks, tongue-mounted tool box, wheel chocks, exterior lighting, solar or 120VAC trickle charger

MATERIALS OF CONSTRUCTION

Material	**Standard Construction**
Impeller	CA6NM Stainless Steel
Shaft	17-4 PH Stainless Steel
Wear Ring	ASTM A48 Class 40 Gray Iron
Suction Cover	Ductile Iron ASTM A536 65-45-12
Volute	Ductile Iron ASTM A536 65-45-12
Brac-Plate/Bracket	Ductile Iron ASTM A536 65-45-12
Mechanical Seal	Silicon Carbide rotating and Tungsten Carbide stationary

Franklin Electric

PIONEER PUMP

MECHANICAL DIMENSIONS

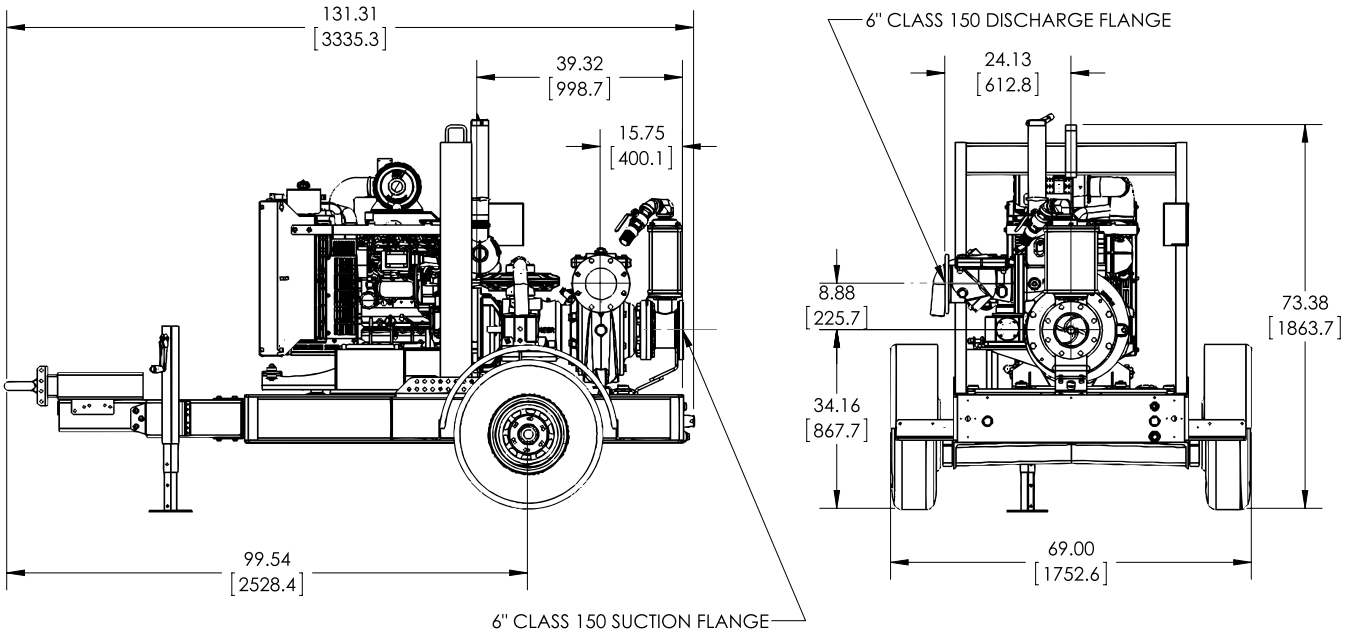

PERFORMANCE CURVE

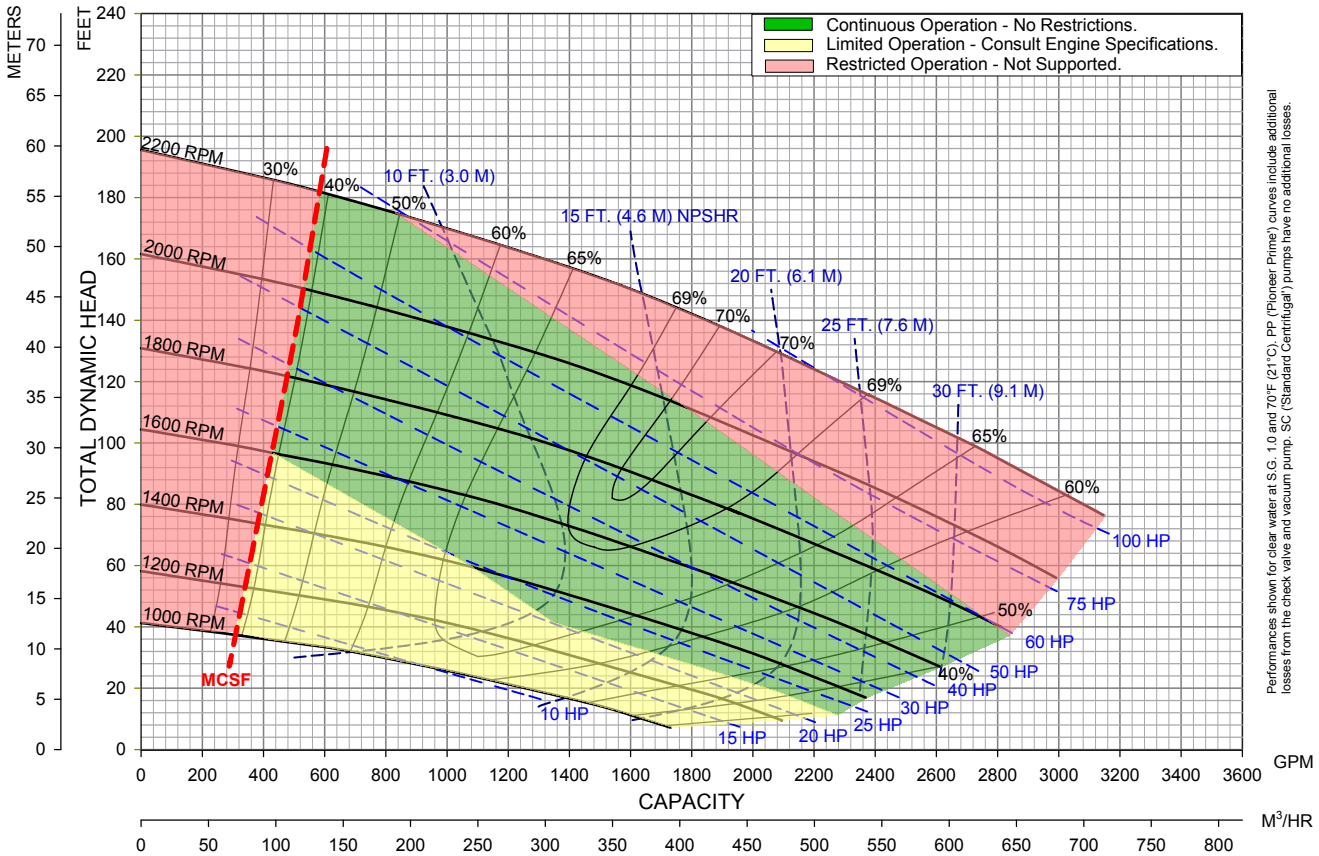

MENU

PIONEER PUMP

Pioneer Prime Diesel-Driven Centrifugal Pump Skid Package

PP66S12L71-4045TFC03

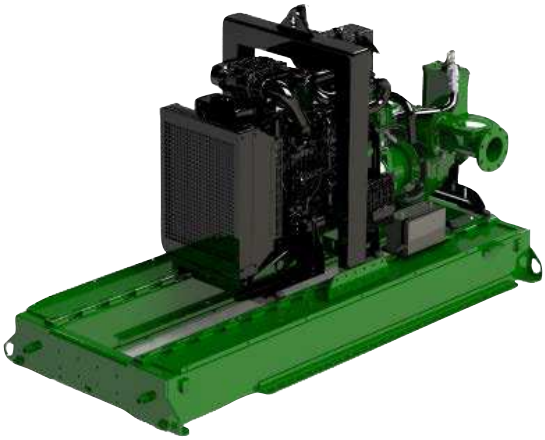

PUMP SPECIFICATIONS

Size	6" x 6" (150 x 150 mm)
Impeller Diameter	11" (279 mm)
Max Flow	2,900 gpm (660 m^3/h)
Max Head	190 feet (58 meters)
Solids Size	3" (76 mm)
Max. Operating Temp.	200 °F (93 °C)
Max. Operating Press.	260 psi (1800 kPa)

ENGINE SPECIFICATIONS

FT4 Engine Type	John Deere 4045TFC03
Displacement	275 cu. in. (4.5 l)
Fuel Consumption	3.95 gph (15 l/h) @ 1800 rpm
Continuous HP	74 HP (55 kW) @ 1800 rpm
Peak HP Rating	74 HP (55 kW)
FT4 Specifics (Def or No Def, DOC, SCR, etc.)	DOC/DPF, SCR
Safety Shut-Down Switches	Low oil press., high temp., v-belt failure
Instrument Panel	Oil pressure gauge, ampmeter, hourmeter, tachometer

PIONEER PRIME PRIMING SYSTEM

Priming System	Mechanically driven diaphragm-style vacuum pump
Air Removal Cap.	50 cfm (.02 cms)
Priming Chamber	Positive sealing air separation w/stainless steel components
Discharge Check Valve	Swing style; ductile iron w/nitrile disc
Run Dry System	Oil-lubricated mech. seal allows pump to run completely dry without damage

FEATURES AND BENEFITS

- Indefinite run-dry capability
- Extreme flow technology
- Environmentally safe priming system: Pioneer Prime
- Auto-start controls
- Trailer options available

OPTIONS AND ACCESSORIES

Parts Kits No.	Mechanical Seal Kit: 372000101 | Bearing Frame Kit: 37300100
Instrument Compatibility	Transducer
Telemetry Ready	Options Available

PACKAGE SPECIFICATIONS

Fuel Capacity	75 gal (284 L)
Control Panel	LOFA CP750
Operating Speed (Min. / Max.)	1,000 / 2,200 rpm
Weight (Dry / Wet)	4,250 lbs / 4,770 lbs
Instrument Compatibility	High/low level floats
Optional Adders	Exterior lighting, solar or 120VAC trickle charger

MATERIALS OF CONSTRUCTION

Material	**Standard Construction**
Impeller	CA6NM Stainless Steel
Shaft	17-4 PH Stainless Steel
Wear Ring	ASTM A48 Class 40 Gray Iron
Suction Cover	Ductile Iron ASTM A536 65-45-12
Volute	Ductile Iron ASTM A536 65-45-12
Brac-Plate/Bracket	Ductile Iron ASTM A536 65-45-12
Mechanical Seal	Silicon Carbide rotating and Tungsten Carbide stationary

Franklin Electric

PIONEER PUMP

MECHANICAL DIMENSIONS

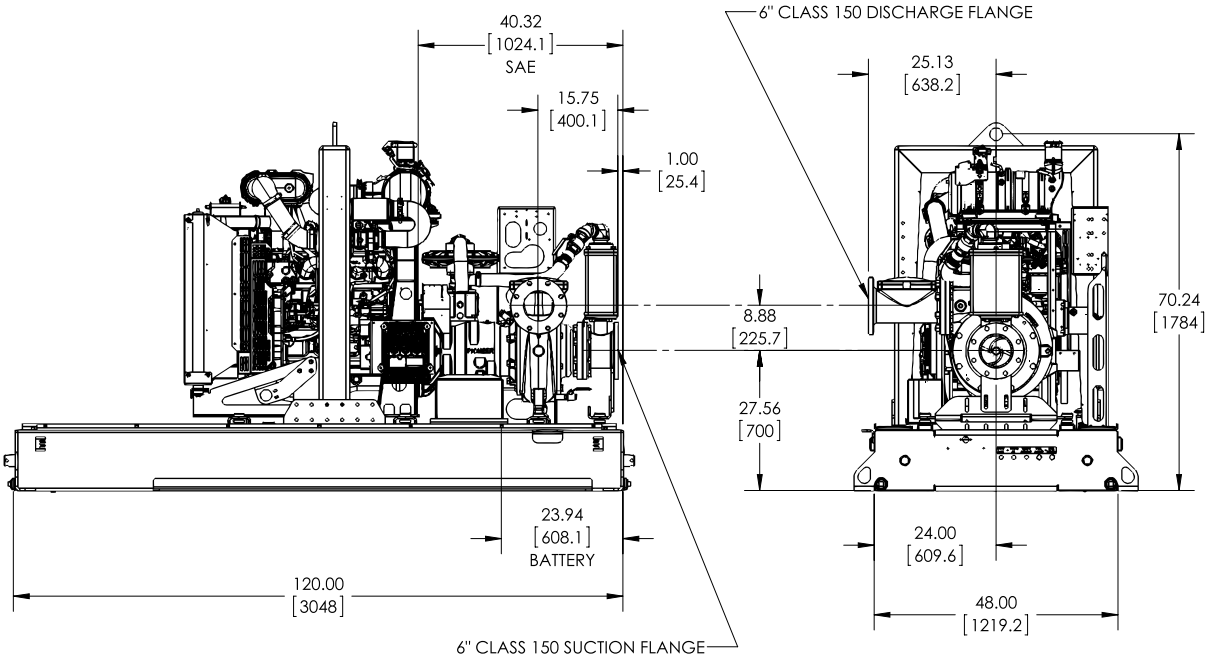

PERFORMANCE CURVE

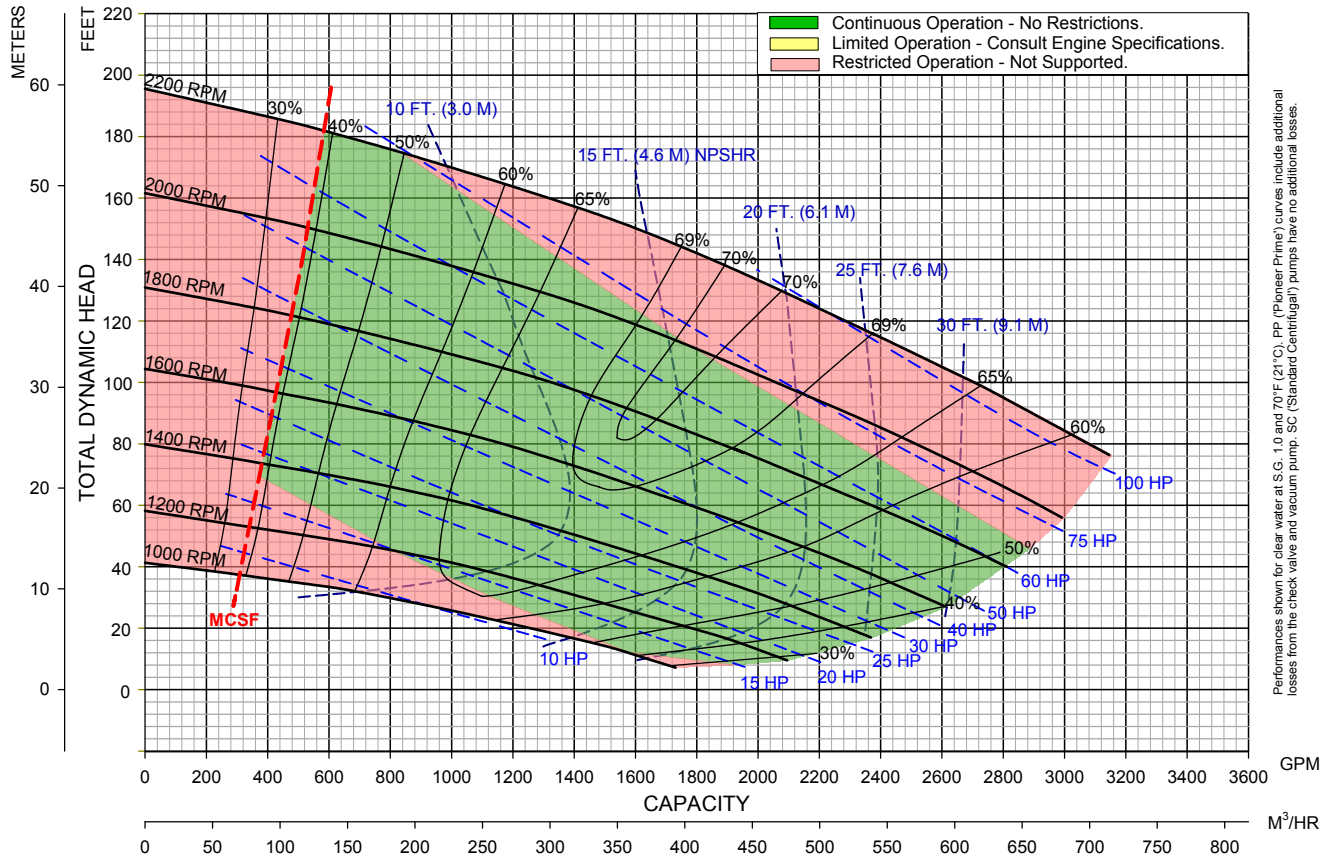

MENU

PIONEER PUMP

Pioneer Prime Diesel-Driven Centrifugal Pump Skid Package

PP1212S17L71-1706J-E93TA

PUMP SPECIFICATIONS

Size	12" x 12" (300 x 300 mm)
Impeller Diameter	17.25" (438 mm)
Max Flow	8,950 gpm (2,033 m^3/h)
Max Head	240 feet (73 meters)
Solids Size	3.6" (90 mm)
Max. Operating Temp.	200 °F (93 °C)
Max. Operating Press.	260 psi (1800 kPa)

ENGINE SPECIFICATIONS

FT4 Engine Type	1706J-E93TA - 335 HP
Displacement	550 cu. in. (9.3 l)
Fuel Consumption	19.7 gph (74.4 l/h) @ 1800 rpm
Continuous HP	335 HP (250 kW) @ 1800 rpm
Peak HP Rating	450 HP (335 kW)
FT4 Specifics (Def or No Def, DOC, SCR, etc.)	DOC/DPF, SCR, EGR
Safety Shut-Down Switches	Low oil press., high temp., v-belt failure
Instrument Panel	Oil pressure gauge, ampmeter, hourmeter, tachometer

PIONEER PRIME PRIMING SYSTEM

Priming System	Mechanically driven diaphragm-style vacuum pump
Air Removal Cap.	50 cfm (.02 cms)
Priming Chamber	Positive sealing air separation w/stainless steel components
Discharge Check Valve	Ductile iron body; swing flex nitrile rubber flapper
Run Dry System	Oil-lubricated mech. seal allows pump to run completely dry without damage

FEATURES AND BENEFITS

- Indefinite run-dry capability
- Extreme flow technology
- Environmentally safe priming system: Pioneer Prime
- Auto-start controls
- Trailer options available

OPTIONS AND ACCESSORIES

Parts Kits No.	Mechanical Seal Kit: 372000149 | Bearing Frame Kit: 373000135
Instrument Compatibility	Transducer
Telemetry Ready	Options Available

PACKAGE SPECIFICATIONS

Fuel Capacity	210 gal
Control Panel	LOFA CP750
Operating Speed (Min. / Max.)	1,200 / 1,800 rpm
Instrument Compatibility	High/low level floats
Enclosure dB(A) Rating	68 dB(A) @ 26 feet (7 meters)
Optional Adders	Exterior lighting, solar or 120VAC trickle charger

MATERIALS OF CONSTRUCTION

Material	**Standard Construction**
Impeller	CA6NM Stainless Steel
Shaft	17-4 PH Stainless Steel
Wear Ring	ASTM A48 Class 40 Gray Iron
Suction Cover	Ductile Iron ASTM A536 65-45-12
Volute	Ductile Iron ASTM A536 65-45-12
Brac-Plate/Bracket	Ductile Iron ASTM A536 65-45-12
Mechanical Seal	Silicon Carbide rotating and Tungsten Carbide stationary

Franklin Electric

PIONEER PUMP

MECHANICAL DIMENSIONS

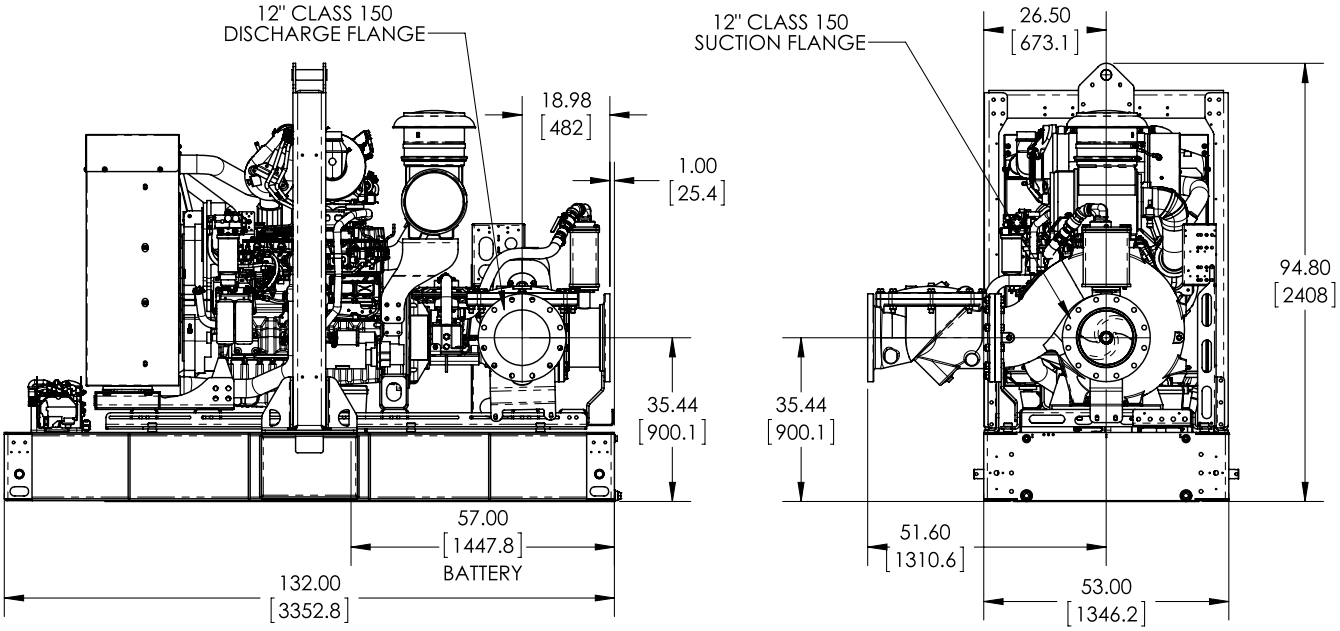

PERFORMANCE CURVE

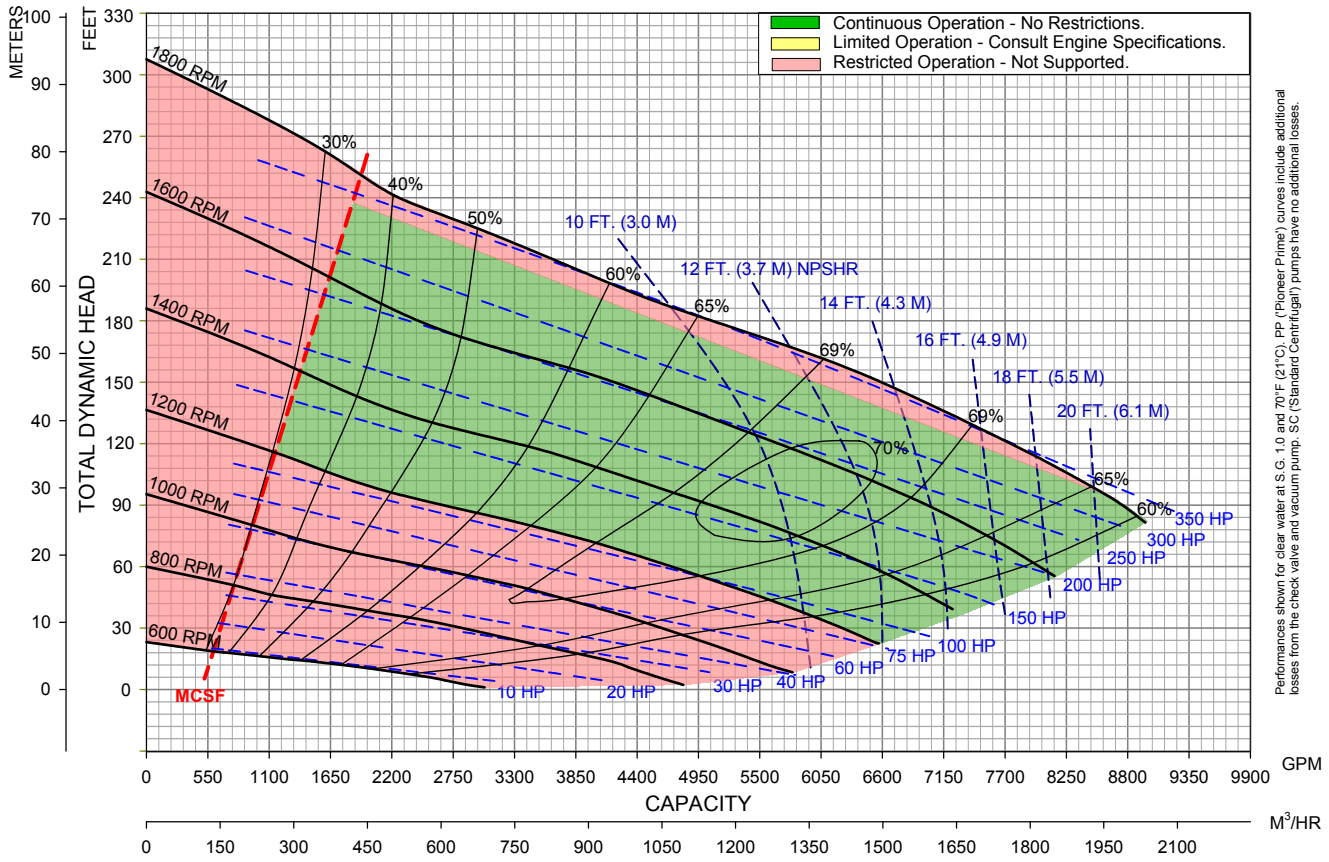

Performances shown for clear water at S.G. 1.0 and 70°F (21°C). PP ('Pioneer Prime') curves include additional losses from the check valve and vacuum pump. SC ('Standard Centrifugal') pumps have no additional losses.

MENU

PIONEER PUMP

Pioneer Prime Sound Attenuated Diesel-Driven Centrifugal Pump Trailer Package

SAPP44S10L71-D2.9L4

PUMP SPECIFICATIONS

Size	4" x 4" (100 x 100 mm)
Impeller Diameter	10" (254 mm)
Max Flow	1,520 gpm (345 m^3/h)
Max Head	150 feet (50 meters)
Solids Size	3" (76 mm)
Max. Operating Temp.	200 °F (93 °C)
Max. Operating Press.	260 psi (1800 kPa)

ENGINE SPECIFICATIONS

FT4 Engine Type	Deutz D2.9L, 4-Cylinder Diesel
Displacement	177 cu. in. (2.9 l)
Fuel Consumption	1.95 gph (7.38 l/h) @ 1800 rpm
Continuous HP	36 HP (27 kW) @ 1800 rpm
Peak HP Rating	50 HP (36.4 kW)
FT4 Specifics (Def or No Def, DOC, SCR, etc.)	DVERT®oxidation catalyst
Safety Shut-Down Switches	Low oil press., high temp., v-belt failure
Instrument Panel	Oil pressure gauge, ampmeter, hourmeter, tachometer

PIONEER PRIME PRIMING SYSTEM

Priming System	Mechanically driven diaphragm-style vacuum pump
Air Removal Cap.	50 cfm (.02 cms)
Priming Chamber	Positive sealing air separation w/stainless steel components
Discharge Check Valve	Swing style; ductile iron w/nitrile disc
Run Dry System	Oil-lubricated mech. seal allows pump to run completely dry without damage

FEATURES AND BENEFITS

- Indefinite run-dry capability
- Extreme flow technology
- Environmentally safe priming system: Pioneer Prime
- Auto-start controls
- Skid options available

OPTIONS AND ACCESSORIES

Parts Kits No.	Mechanical Seal Kit: 372000109 | Bearing Frame Kit: 373000107
Instrument Compatibility	Transducer
Telemetry Ready	Options Available

PACKAGE SPECIFICATIONS

Fuel Capacity	75 gal (284 L)
Control Panel	LOFA CP750
Operating Speed (Min. / Max.)	1,000 / 2,200 rpm
Weight (Dry / Wet)	3,000 lbs / 3,525 lbs
Instrument Compatibility	High/low level floats
Trailer Brakes	Electric
Enclosure dB(A) Rating	69 dB(A) @ 26 feet (7 meters)
Optional Adders	Surge brakes, corner jacks, tongue-mounted tool box, wheel chocks, interior/exterior lighting, solar or 120VAC trickle charger, 120VAC inverter

MATERIALS OF CONSTRUCTION

Material	**Standard Construction**
Impeller	CA6NM Stainless Steel
Shaft	17-4 PH Stainless Steel
Wear Ring	ASTM A48 Class 40 Gray Iron
Suction Cover	Ductile Iron ASTM A536 65-45-12
Volute	Ductile Iron ASTM A536 65-45-12
Brac-Plate/Bracket	Ductile Iron ASTM A536 65-45-12
Mechanical Seal	Silicon Carbide rotating and Tungsten Carbide stationary

Franklin Electric

PIONEER PUMP

MECHANICAL DIMENSIONS

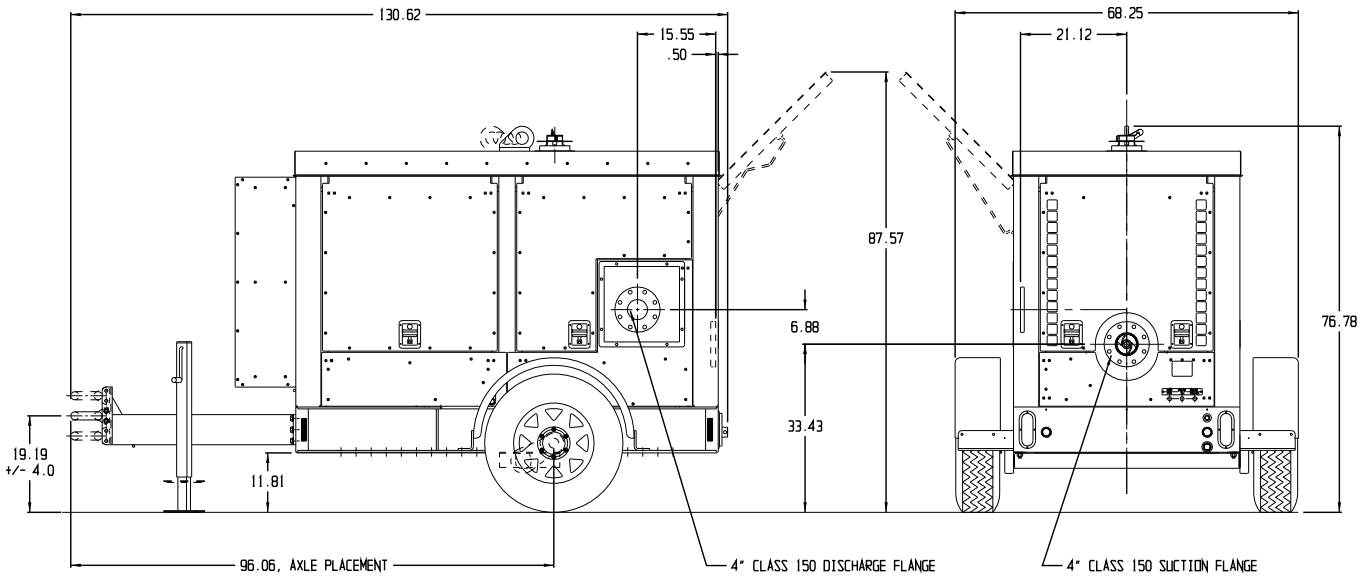

PERFORMANCE CURVE

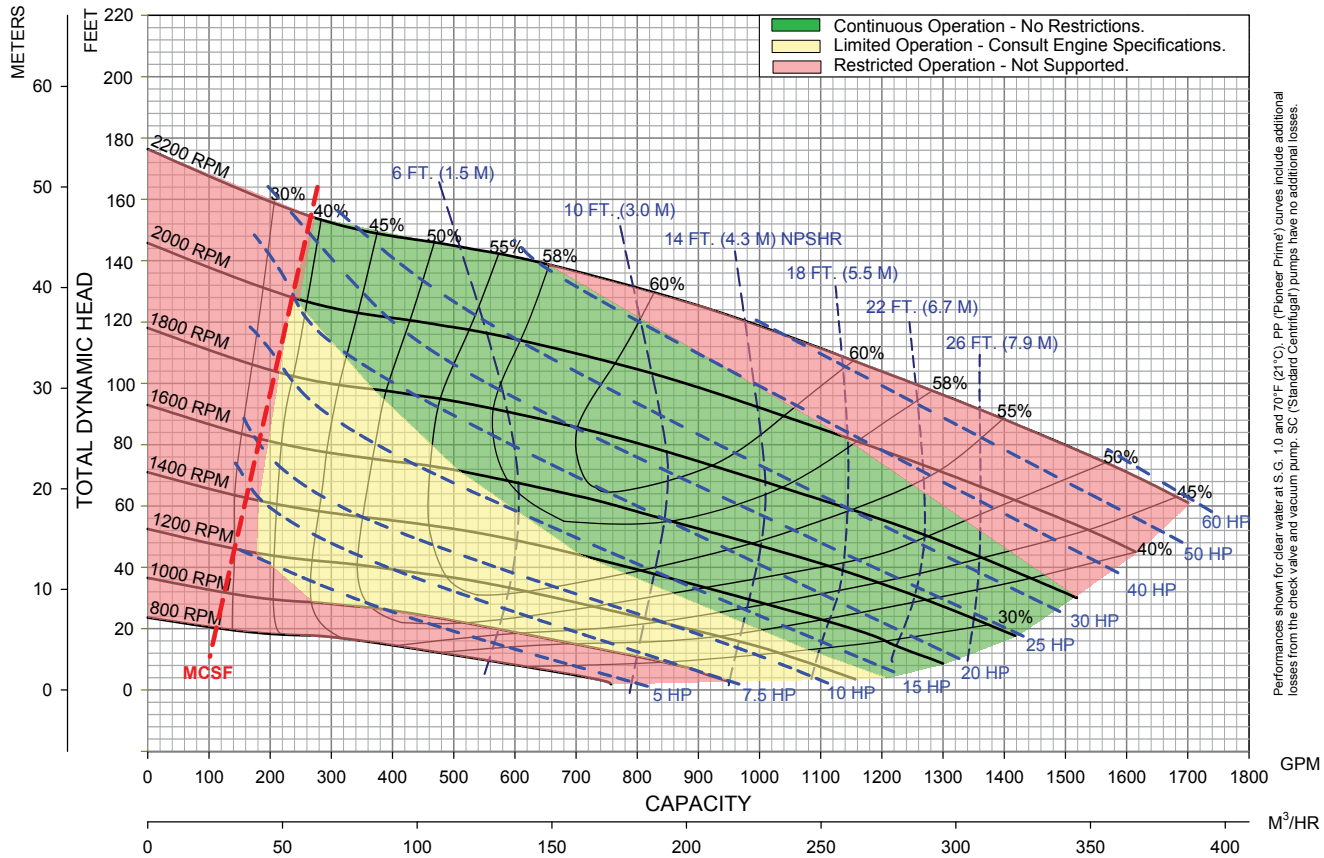

MENU

PIONEER PUMP

Pioneer Prime Sound Attenuated Diesel-Driven Centrifugal Pump Trailer Package

SAPP44V10L72-D2.9L4

PUMP SPECIFICATIONS

Size	4" x 4" (100 x 100 mm)
Impeller Diameter	10.63" (270 mm)
Max Flow	1,400 gpm (318 m^3/h)
Max Head	136 feet (42 meters)
Solids Size	3.15" (80 mm)
Max. Operating Temp.	200 °F (93 °C)
Max. Operating Press.	260 psi (1800 kPa)

ENGINE SPECIFICATIONS

FT4 Engine Type	Deutz D2.9L, 4-Cylinder Diesel
Displacement	177 cu. in. (2.9 l)
Fuel Consumption	1.95 gph (7.38 l/h) @ 1800 rpm
Continuous HP	36 HP (27 kW) @ 1800 rpm
Peak HP Rating	50 HP (36.4 kW)
FT4 Specifics (Def or No Def, DOC, SCR, etc.)	DVERT®oxidation catalyst
Safety Shut-Down Switches	Low oil press., high temp., v-belt failure
Instrument Panel	Oil pressure gauge, ampmeter, hourmeter, tachometer

PIONEER PRIME PRIMING SYSTEM

Priming System	Mechanically driven diaphragm-style vacuum pump
Air Removal Cap.	50 cfm (.02 cms)
Priming Chamber	Heavy-duty chamber w/no blow-by and stainless steel components
Discharge Check Valve	Elbow ball valve style w/cast iron body avoids clogs from passed-through solids
Run Dry System	Oil-lubricated mech. seal allows pump to run completely dry without damage

FEATURES AND BENEFITS

- Indefinite run-dry capability
- Extreme flow technology
- Environmentally safe priming system: Pioneer Prime
- Auto-start controls
- Skid options available

OPTIONS AND ACCESSORIES

Parts Kits No.	N/A
Instrument Compatibility	Transducer
Telemetry Ready	Options Available

PACKAGE SPECIFICATIONS

Fuel Capacity	75 gal (284 L)
Control Panel	LOFA CP750
Operating Speed (Min. / Max.)	1,000 / 2,200 rpm
Weight (Dry / Wet)	3,000 lbs / 3,525 lbs
Instrument Compatibility	High/low level floats
Trailer Brakes	Electric
Enclosure dB(A) Rating	68 dB(A) @ 26 feet (7 meters)
Optional Adders	Surge brakes, corner jacks, tongue-mounted tool box, wheel chocks, interior/exterior lighting, solar or 120VAC trickle charger, 120VAC inverter

MATERIALS OF CONSTRUCTION

Material	**Standard Construction**
Impeller	Ductile Iron 65-45-12
Shaft	17-4 PH Stainless Steel
Volute	Ductile Iron 65-45-12
Brac-Plate/Bracket	ASTM A48 Class 30/35 Cast Iron
Mechanical Seal	Silicon Carbide rotating and Tungsten Carbide stationary

Franklin Electric

PIONEER PUMP

MECHANICAL DIMENSIONS

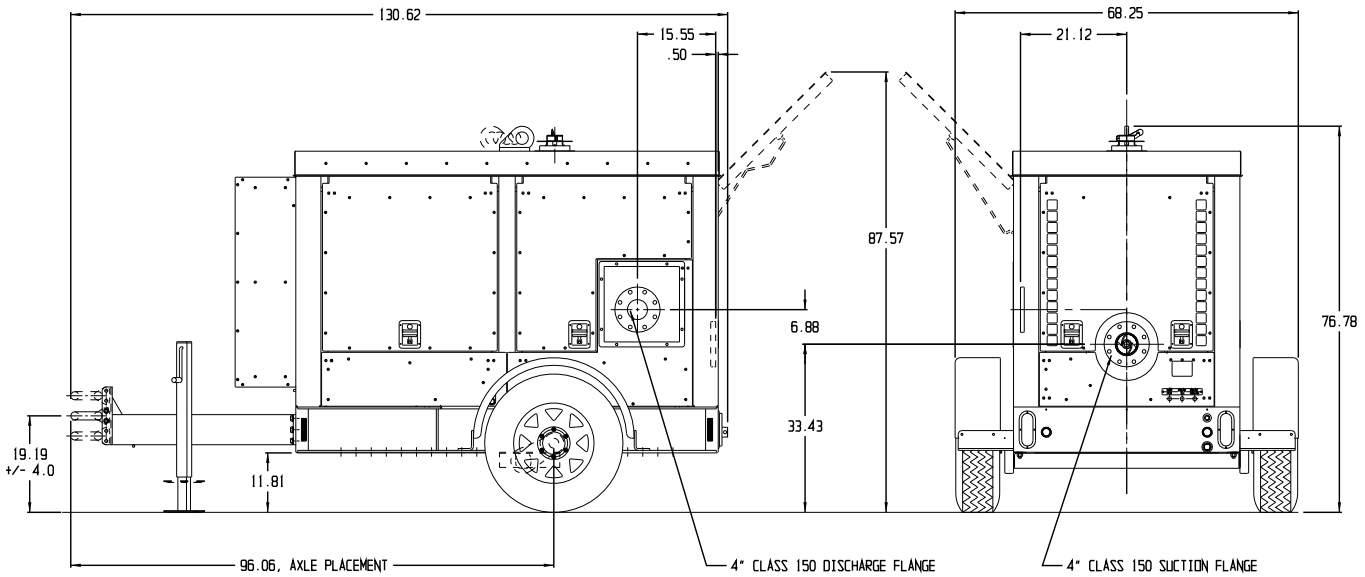

PERFORMANCE CURVE

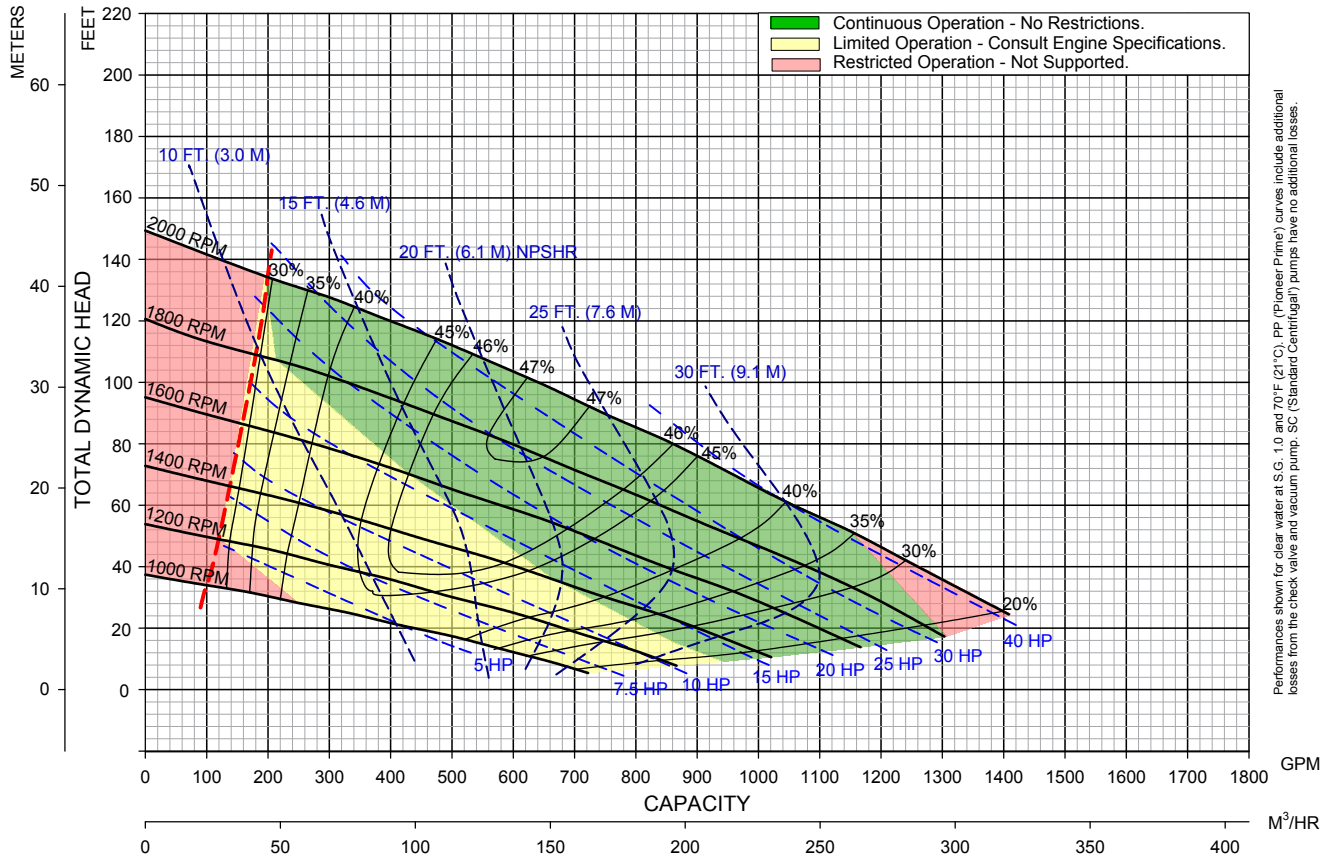

MENU

PIONEER PUMP

Pioneer Prime Sound Attenuated Diesel-Driven Centrifugal Pump Trailer Package

SAPP64S12L71-TD2.9L4

PUMP SPECIFICATIONS

Size	6" x 4" (150 x 100 mm)
Impeller Diameter	12" (305 mm)
Max Flow	1,830 gpm (499 m^3/h)
Max Head	265 feet (80 meters)
Solids Size	3" (76 mm)
Max. Operating Temp.	200 °F (93 °C)
Max. Operating Press.	260 psi (1800 kPa)

ENGINE SPECIFICATIONS

FT4 Engine Type	Deutz TD2.9L, 4-Cylinder Diesel
Displacement	177 cu. in. (2.9 l)
Fuel Consumption	1.95 gph (7.38 l/h) @ 1800 rpm
Continuous HP	58 HP (43 kW) @ 1800 rpm
Peak HP Rating	75 HP (55 kW)
FT4 Specifics (Def or No Def, DOC, SCR, etc.)	DOC
Safety Shut-Down Switches	Low oil press., high temp., v-belt failure
Instrument Panel	Oil pressure gauge, ampmeter, hourmeter, tachometer

PIONEER PRIME PRIMING SYSTEM

Priming System	Mechanically driven diaphragm-style vacuum pump
Air Removal Cap.	50 cfm (.02 cms)
Priming Chamber	Positive sealing air separation w/stainless steel components
Discharge Check Valve	Swing style; ductile iron w/nitrile disc
Run Dry System	Oil-lubricated mech. seal allows pump to run completely dry without damage

FEATURES AND BENEFITS

- Indefinite run-dry capability
- Extreme flow technology
- Environmentally safe priming system: Pioneer Prime
- Auto-start controls
- Skid options available

OPTIONS AND ACCESSORIES

Parts Kits No.	Mechanical Seal Kit: 372000154 | Bearing Frame Kit: 373000146
Instrument Compatibility	Transducer
Telemetry Ready	Options Available

PACKAGE SPECIFICATIONS

Fuel Capacity	75 gal (284 L)
Control Panel	LOFA CP750
Operating Speed (Min. / Max.)	1,000 / 2,200 rpm
Weight (Dry / Wet)	4,125 lbs / 4,645 lbs
Instrument Compatibility	High/low level floats
Trailer Brakes	Electric
Enclosure dB(A) Rating	68 dB(A) @ 23 feet (7 meters)
Optional Adders	Surge breaks, corner jacks, tongue-mounted tool box, wheel chocks, interior/exterior lighting, solar or 120VAC trickle charger, 120VAC inverter

MATERIALS OF CONSTRUCTION

Material	**Standard Construction**
Impeller	CA6NM Stainless Steel
Shaft	17-4 PH Stainless Steel
Wear Ring	ASTM A48 Class 40 Gray Iron
Suction Cover	Ductile Iron ASTM A536 65-45-12
Volute	Ductile Iron ASTM A536 65-45-12
Brac-Plate/Bracket	Ductile Iron ASTM A536 65-45-12
Mechanical Seal	Silicon Carbide rotating and Tungsten Carbide stationary

Franklin Electric

PIONEER PUMP

MECHANICAL DIMENSIONS

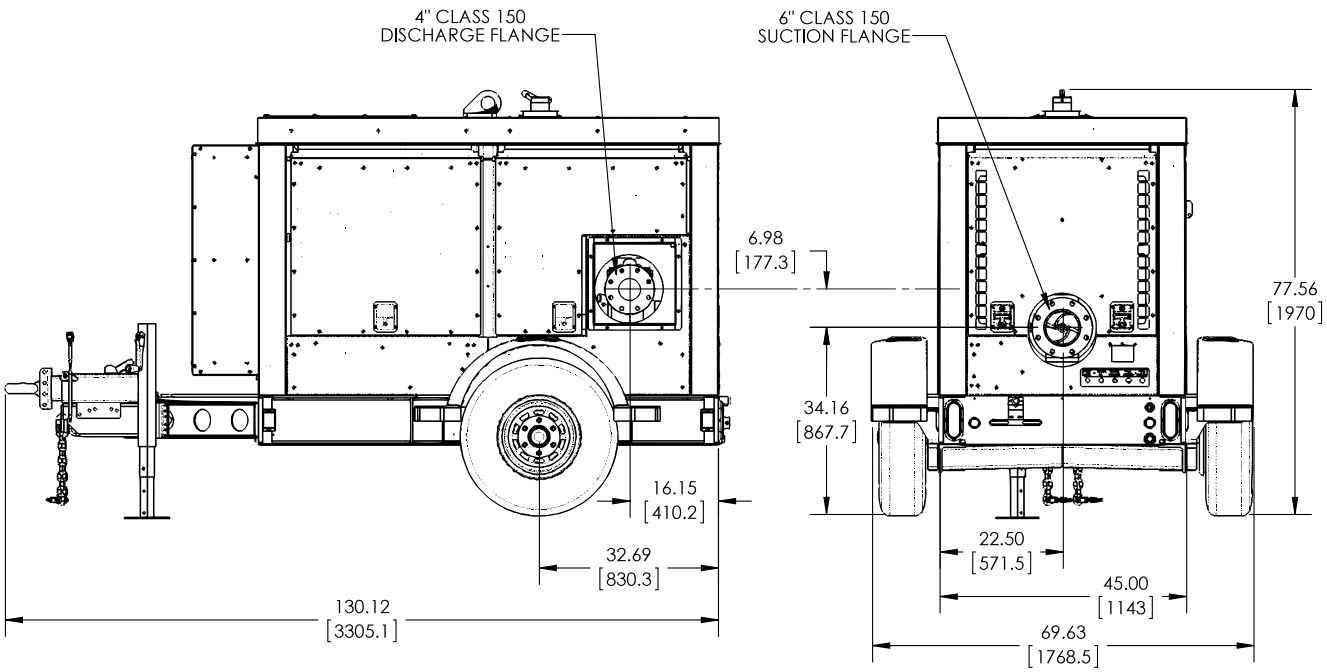

PERFORMANCE CURVE

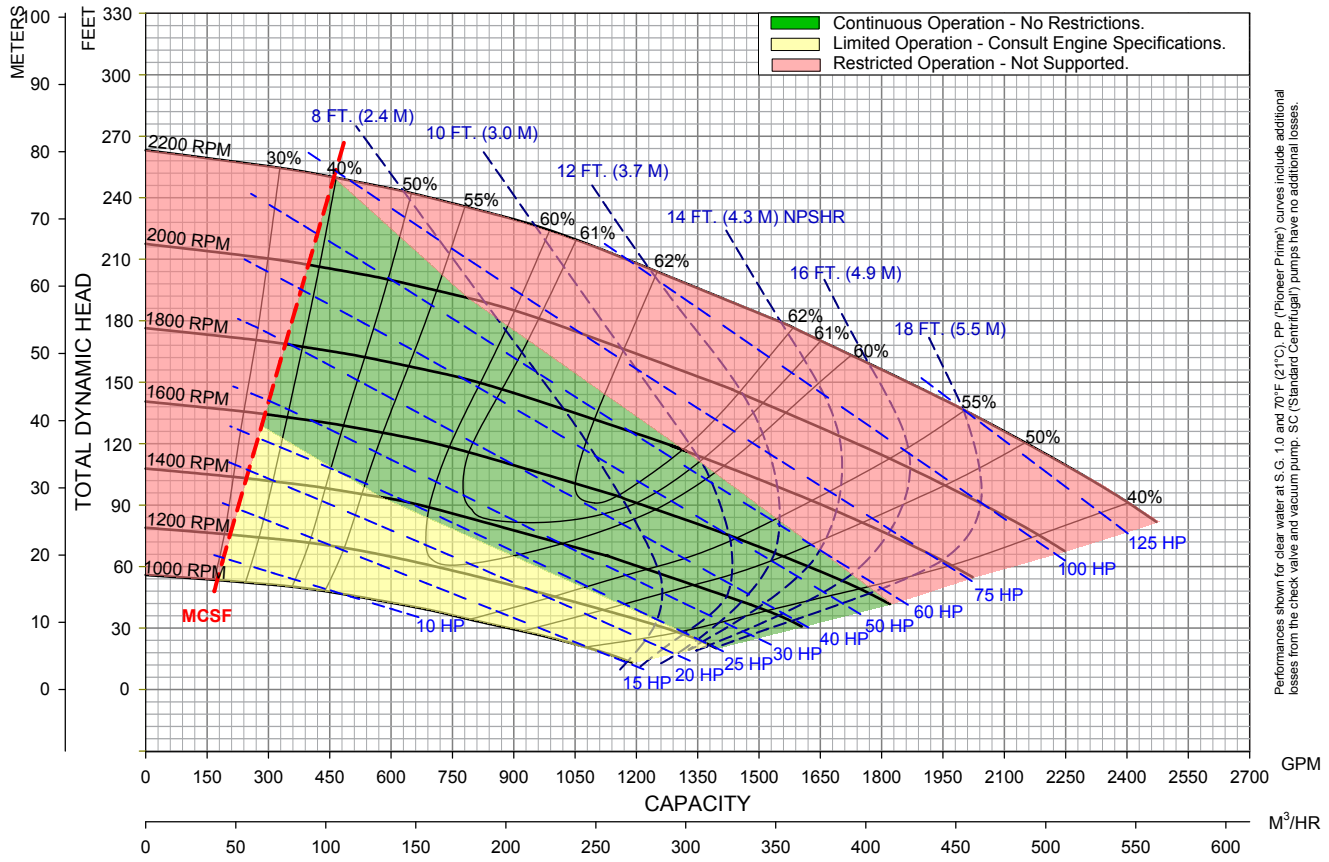

MENU

PIONEER PUMP

Pioneer Prime Sound Attenuated Diesel-Driven Centrifugal Pump Trailer Package

SAPP64S12L71-4045TFC03

PUMP SPECIFICATIONS

Size	6" x 4" (150 x 100 mm)
Impeller Diameter	12" (305 mm)
Max Flow	1,830 gpm (499 m^3/h)
Max Head	265 feet (80 meters)
Solids Size	3" (76 mm)
Max. Operating Temp.	200 °F (93 °C)
Max. Operating Press.	260 psi (1800 kPa)

ENGINE SPECIFICATIONS

FT4 Engine Type	John Deere 4045TFC03
Displacement	275 cu. in. (4.5 l)
Fuel Consumption	3.95 gph (15 l/h) @ 1800 rpm
Continuous HP	74 HP (55 kW) @ 1800 rpm
Peak HP Rating	74 HP (55 kW)
FT4 Specifics (Def or No Def, DOC, SCR, etc.)	DOC/DPF, SCR
Safety Shut-Down Switches	Low oil press., high temp., v-belt failure
Instrument Panel	Oil pressure gauge, ampmeter, hourmeter, tachometer

PIONEER PRIME PRIMING SYSTEM

Priming System	Mechanically driven diaphragm-style vacuum pump
Air Removal Cap.	50 cfm (.02 cms)
Priming Chamber	Positive sealing air separation w/stainless steel components
Discharge Check Valve	Swing style; ductile iron w/nitrile disc
Run Dry System	Oil-lubricated mech. seal allows pump to run completely dry without damage

FEATURES AND BENEFITS

- Indefinite run-dry capability
- Extreme flow technology
- Environmentally safe priming system: Pioneer Prime
- Auto-start controls
- Skid options available

OPTIONS AND ACCESSORIES

Parts Kits No.	Mechanical Seal Kit: 372000154 | Bearing Frame Kit: 373000146
Instrument Compatibility	Transducer
Telemetry Ready	Options Available

PACKAGE SPECIFICATIONS

Fuel Capacity	135 gal (511 L)
Control Panel	LOFA CP750
Operating Speed (Min. / Max.)	1,000 / 2,200 rpm
Weight (Dry / Wet)	4,975 lbs / 5,734 lbs
Instrument Compatibility	High/low level floats
Trailer Brakes	Electric
Enclosure dB(A) Rating	69 dB(A) @ 26 feet (7 meters)
Optional Adders	Surge brakes, corner jacks, tongue-mounted tool box, wheel chocks, interior/exterior lighting, solar or 120VAC trickle charger, 120VAC inverter

MATERIALS OF CONSTRUCTION

Material	**Standard Construction**
Impeller	CA6NM Stainless Steel
Shaft	17-4 PH Stainless Steel
Wear Ring	ASTM A48 Class 40 Gray Iron
Suction Cover	Ductile Iron ASTM A536 65-45-12
Volute	Ductile Iron ASTM A536 65-45-12
Brac-Plate/Bracket	Ductile Iron ASTM A536 65-45-12
Mechanical Seal	Silicon Carbide rotating and Tungsten Carbide stationary

Franklin Electric

PIONEER PUMP

MECHANICAL DIMENSIONS

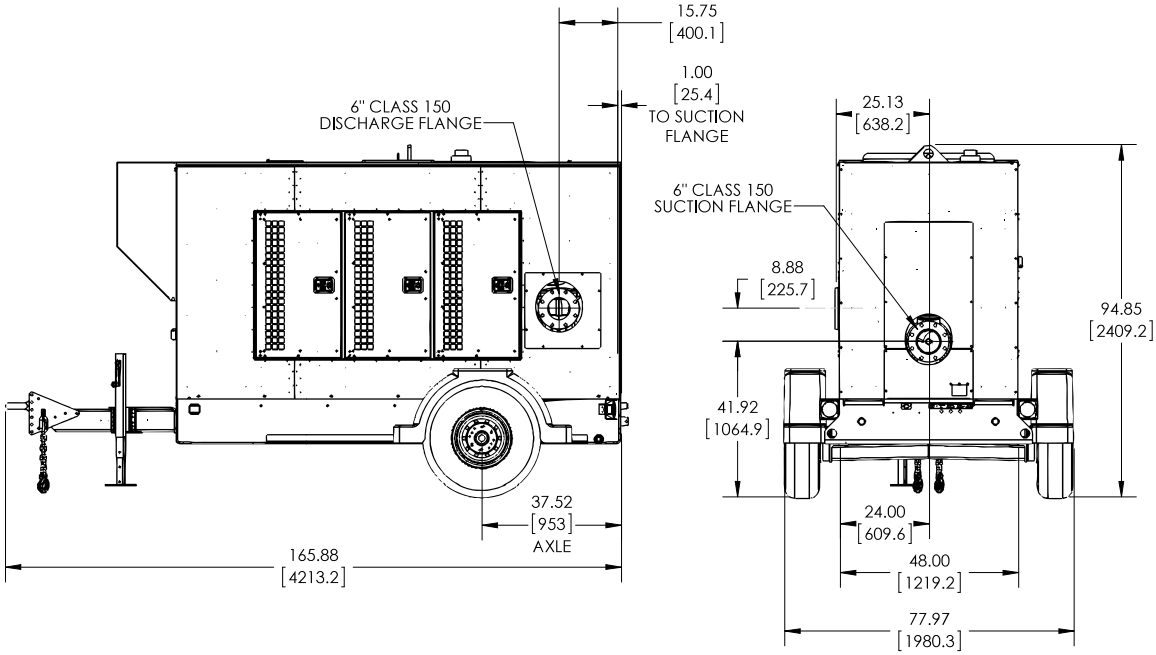

PERFORMANCE CURVE

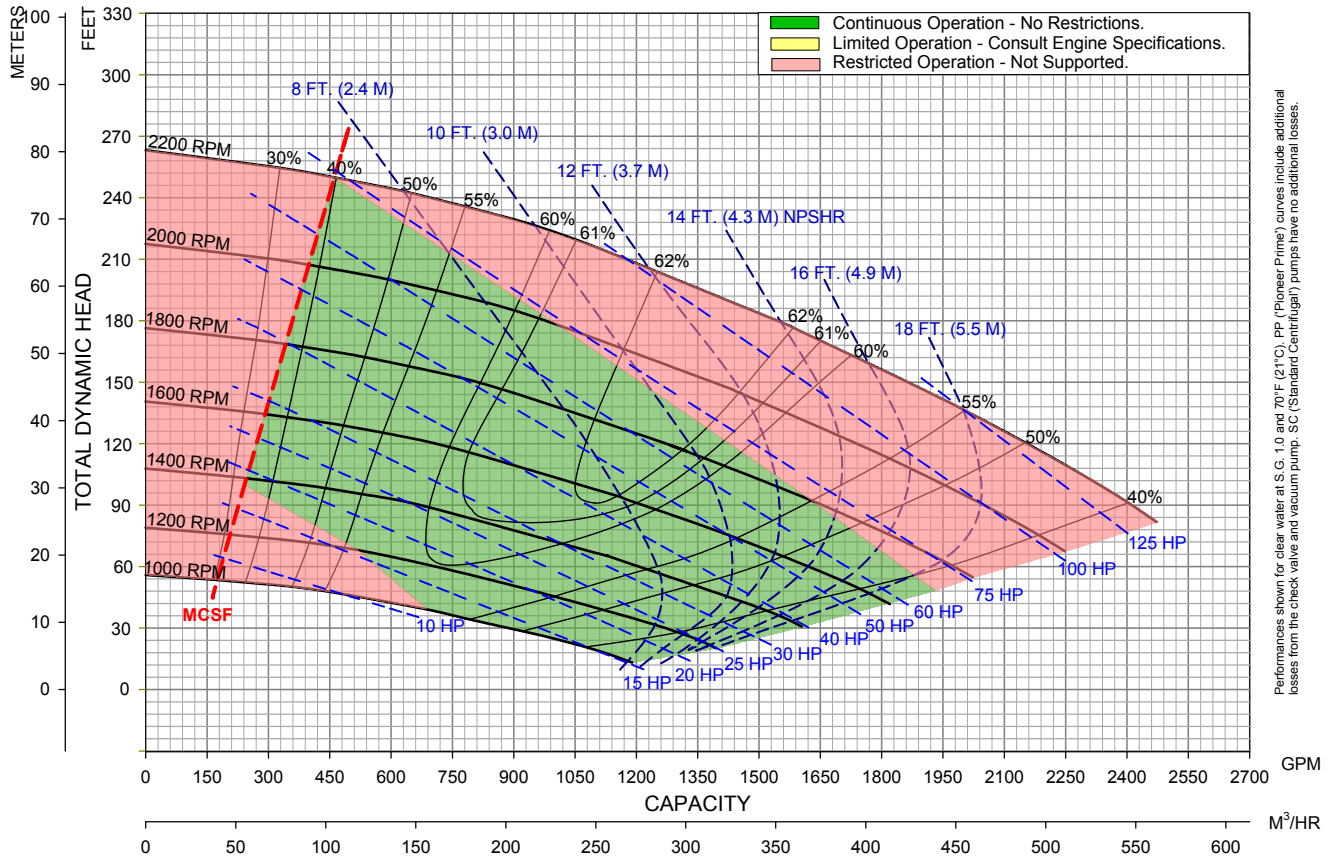

Performances shown for clear water at S.G. 1.0 and 70°F (21°C). PP ('Pioneer Prime') curves include additional losses from the check valve and vacuum pump. SC ('Standard Centrifugal') pumps have no additional losses.

MENU

PIONEER PUMP

Pioneer Prime Sound Attenuated Diesel-Driven Centrifugal Pump Trailer Package

SAPP66S12L71-TD2.9L4

PUMP SPECIFICATIONS

Size	6" x 6" (150 x 150 mm)
Impeller Diameter	11" (279 mm)
Max Flow	2,700 gpm (613 m^3/h)
Max Head	195 feet (59 meters)
Solids Size	3" (76 mm)
Max. Operating Temp.	200 °F (93 °C)
Max. Operating Press.	260 psi (1800 kPa)

ENGINE SPECIFICATIONS

FT4 Engine Type	Deutz TD2.9L, 4-Cylinder Diesel
Displacement	177 cu. in. (2.9 l)
Fuel Consumption	1.95 gph (7.38 l/h) @ 1800 rpm
Continuous HP	58 HP (43 kW) @ 1800 rpm
Peak HP Rating	75 HP (55 kW)
FT4 Specifics (Def or No Def, DOC, SCR, etc.)	DOC
Safety Shut-Down Switches	Low oil press., high temp., v-belt failure
Instrument Panel	Oil pressure gauge, ampmeter, hourmeter, tachometer

PIONEER PRIME PRIMING SYSTEM

Priming System	Mechanically driven diaphragm-style vacuum pump
Air Removal Cap.	50 cfm (.02 cms)
Priming Chamber	Positive sealing air separation w/stainless steel components
Discharge Check Valve	Swing style; ductile iron w/nitrile disc
Run Dry System	Oil-lubricated mech. seal allows pump to run completely dry without damage

FEATURES AND BENEFITS

- Indefinite run-dry capability
- Extreme flow technology
- Environmentally safe priming system: Pioneer Prime
- Auto-start controls
- Skid options available

OPTIONS AND ACCESSORIES

Parts Kits No.	Mechanical Seal Kit: 372000101 | Bearing Frame Kit: 37300100
Instrument Compatibility	Transducer
Telemetry Ready	Options Available

PACKAGE SPECIFICATIONS

Fuel Capacity	75 gal (284 L)
Control Panel	LOFA CP750
Operating Speed (Min. / Max.)	1,000 / 2,200 rpm
Weight (Dry / Wet)	4,200 lbs / 4,725 lbs
Instrument Compatibility	High/low level floats
Trailer Brakes	Electric
Enclosure dB(A) Rating	68 dB(A) @ 21 feet (7 meters)
Optional Adders	Corner jacks, tongue-mounted tool box, wheel chocks, interior/exterior lighting, solar or 120VAC trickle charger, 120VAC inverter

MATERIALS OF CONSTRUCTION

Material	**Standard Construction**
Impeller	CA6NM Stainless Steel
Shaft	17-4 PH Stainless Steel
Wear Ring	ASTM A48 Class 40 Gray Iron
Suction Cover	Ductile Iron ASTM A536 65-45-12
Volute	Ductile Iron ASTM A536 65-45-12
Brac-Plate/Bracket	Ductile Iron ASTM A536 65-45-12
Mechanical Seal	Silicon Carbide rotating and Tungsten Carbide stationary

Franklin Electric

PIONEER PUMP

MECHANICAL DIMENSIONS

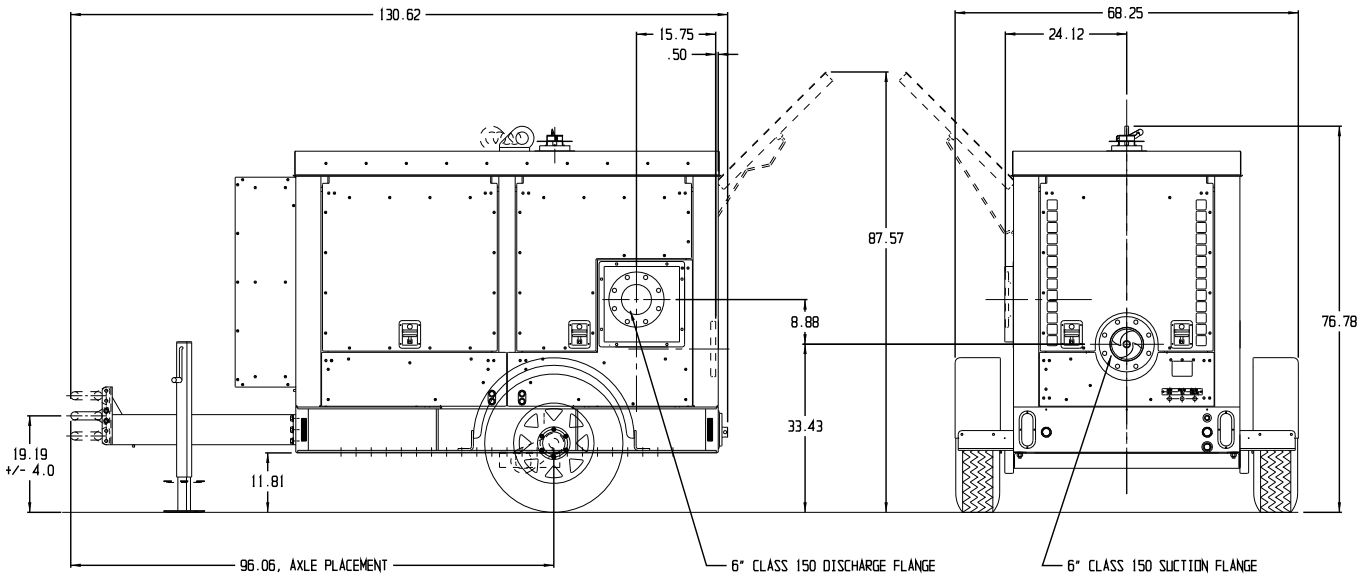

PERFORMANCE CURVE

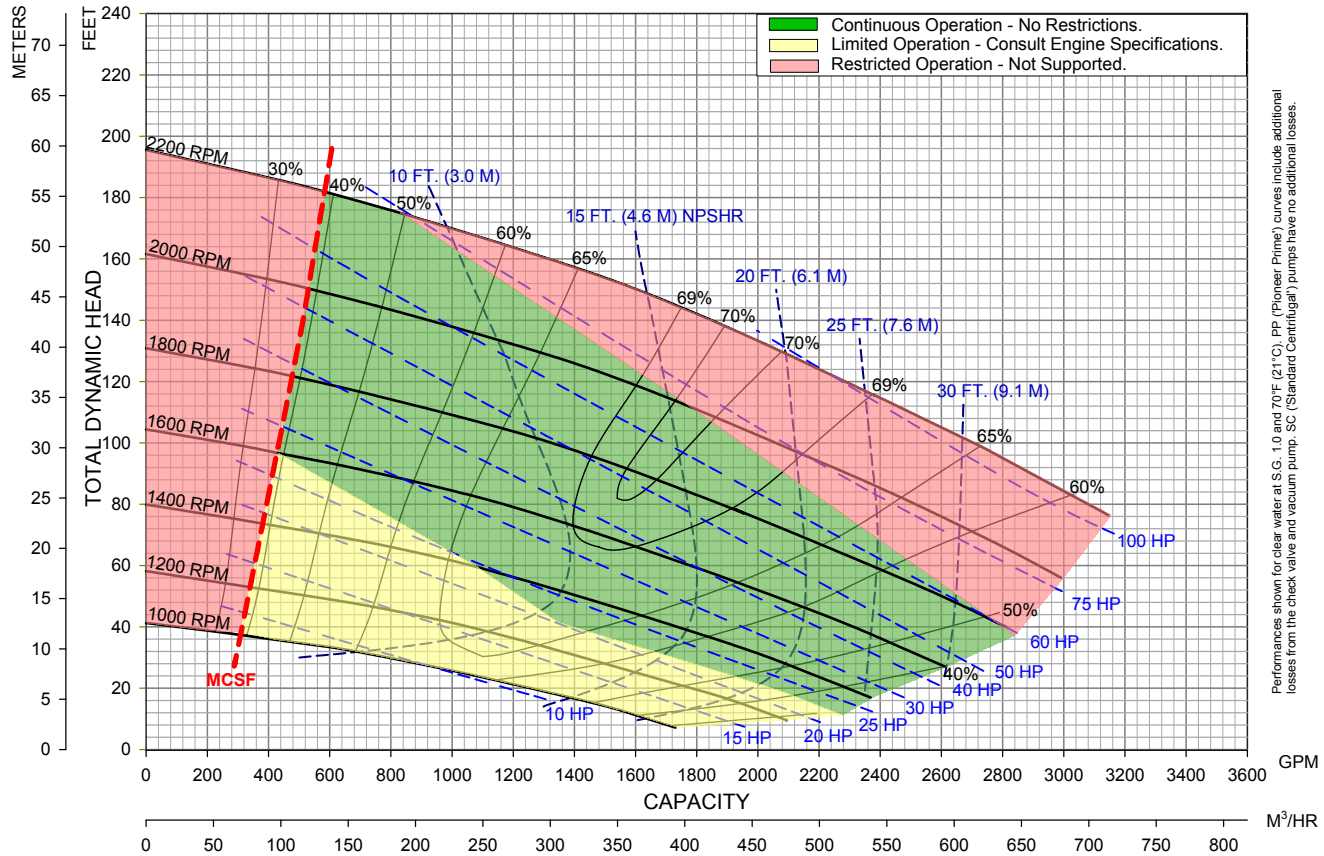

MENU

PIONEER PUMP

Pioneer Prime Sound Attenuated Diesel-Driven Centrifugal Pump Trailer Package

SAPP66S12L71-4045TFC03

PUMP SPECIFICATIONS

Size	6" x 6" (150 x 150 mm)
Impeller Diameter	11" (279 mm)
Max Flow	2,700 gpm (613 m^3/h)
Max Head	190 feet (58 meters)
Solids Size	3" (76 mm)
Max. Operating Temp.	200 °F (93 °C)
Max. Operating Press.	260 psi (1800 kPa)

ENGINE SPECIFICATIONS

FT4 Engine Type	John Deere 4045TFC03
Displacement	275 cu. in. (4.5 l)
Fuel Consumption	3.95 gph (15 l/h) @ 1800 rpm
Continuous HP	74 HP (55 kW) @ 1800 rpm
Peak HP Rating	74 HP (55 kW)
FT4 Specifics (Def or No Def, DOC, SCR, etc.)	DOC/DPF, SCR
Safety Shut-Down Switches	Low oil press., high temp., v-belt failure
Instrument Panel	Oil pressure gauge, ampmeter, hourmeter, tachometer

PIONEER PRIME PRIMING SYSTEM

Priming System	Mechanically driven diaphragm-style vacuum pump
Air Removal Cap.	50 cfm (.02 cms)
Priming Chamber	Positive sealing air separation w/stainless steel components
Discharge Check Valve	Swing style; ductile iron w/nitrile disc
Run Dry System	Oil-lubricated mech. seal allows pump to run completely dry without damage

FEATURES AND BENEFITS

- Indefinite run-dry capability
- Extreme flow technology
- Environmentally safe priming system: Pioneer Prime
- Auto-start controls
- Skid options available

OPTIONS AND ACCESSORIES

Parts Kits No.	Mechanical Seal Kit: 372000101 | Bearing Frame Kit: 37300100
Instrument Compatibility	Transducer
Telemetry Ready	Options Available

PACKAGE SPECIFICATIONS

Fuel Capacity	135 gal (511 L)
Control Panel	LOFA CP750
Operating Speed (Min. / Max.)	900 / 2,000 rpm
Weight (Dry / Wet)	5,050 lbs / 5,809 lbs
Instrument Compatibility	High/low level floats
Trailer Brakes	Electric
Enclosure dB(A) Rating	69 dB(A) @ 26 feet (7 meters)
Optional Adders	Surge breaks, corner jacks, tongue-mounted tool box, wheel chocks, interior/exterior lighting, solar or 120VAC trickle charger, 120VAC inverter

MATERIALS OF CONSTRUCTION

Material	**Standard Construction**
Impeller	CA6NM Stainless Steel
Shaft	17-4 PH Stainless Steel
Wear Ring	ASTM A48 Class 40 Gray Iron
Suction Cover	Ductile Iron ASTM A536 65-45-12
Volute	Ductile Iron ASTM A536 65-45-12
Brac-Plate/Bracket	Ductile Iron ASTM A536 65-45-12
Mechanical Seal	Silicon Carbide rotating and Tungsten Carbide stationary

Franklin Electric

PIONEER PUMP

MECHANICAL DIMENSIONS

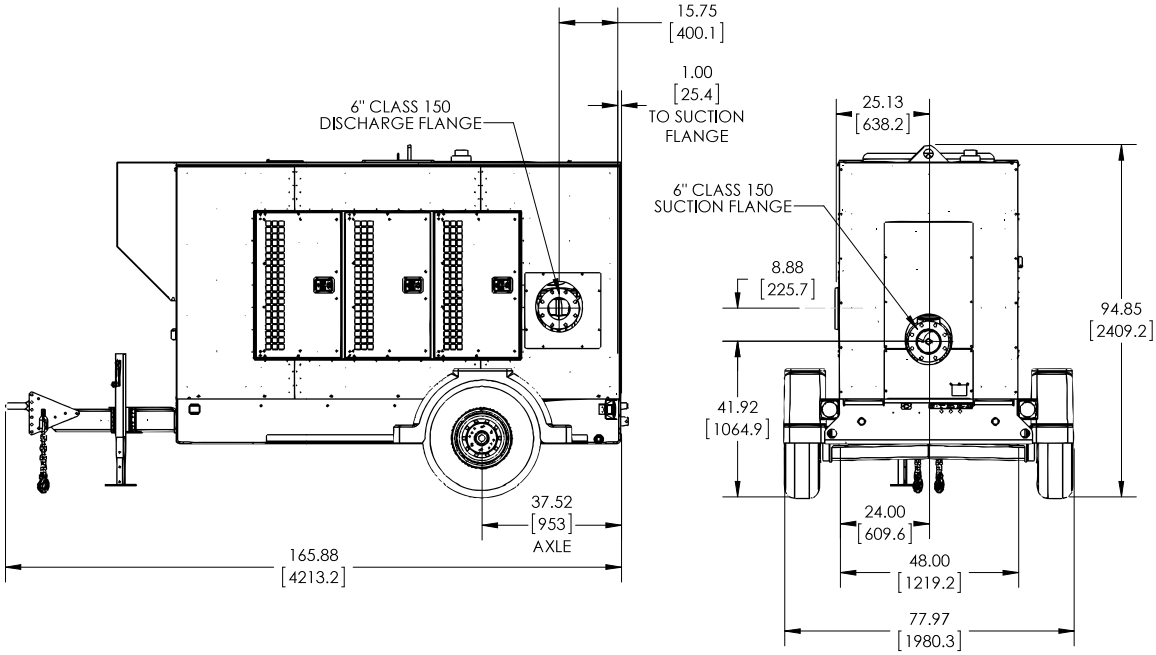

PERFORMANCE CURVE

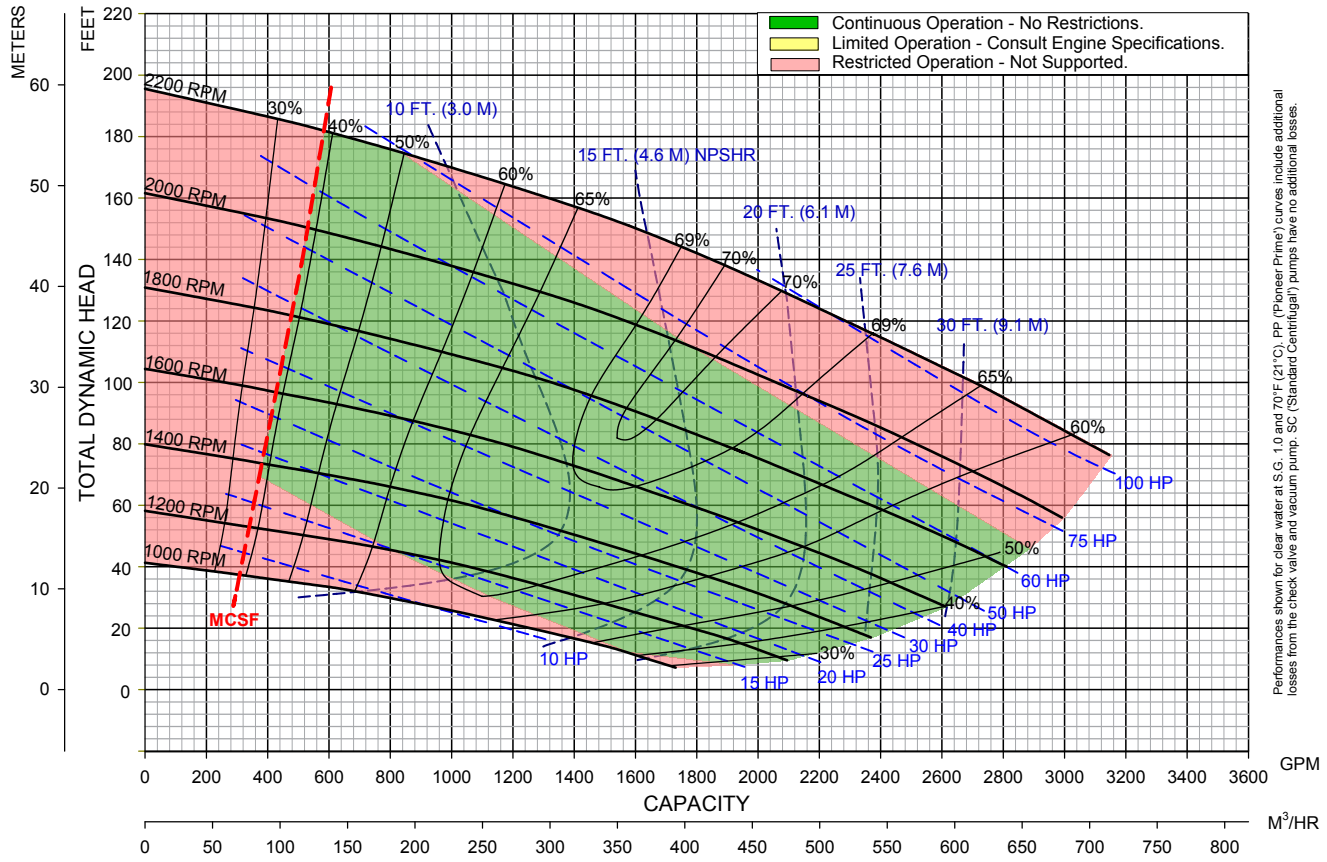

MENU

PIONEER PUMP

Pioneer Prime Sound Attenuated Diesel-Driven Centrifugal Pump Trailer Package

SAPP66V12L72-TD2.9L4

PUMP SPECIFICATIONS

Size	6" x 6" (150 x 150 mm)
Impeller Diameter	10.24" (260 mm)
Max Flow	2,150 gpm (488 m^3/h)
Max Head	120 feet (37 meters)
Solids Size	4.92" (125 mm)
Max. Operating Temp.	200 °F (93 °C)
Max. Operating Press.	260 psi (1800 kPa)

ENGINE SPECIFICATIONS

FT4 Engine Type	Deutz TD2.9L, 4-Cylinder Diesel
Displacement	177 cu. in. (2.9 l)
Fuel Consumption	1.95 gph (7.38 l/h) @ 1800 rpm
Continuous HP	58 HP (43 kW) @ 1800 rpm
Peak HP Rating	75 HP (55 kW)
FT4 Specifics (Def or No Def, DOC, SCR, etc.)	DVERT®oxidation catalyst
Safety Shut-Down Switches	Low oil press., high temp., v-belt failure
Instrument Panel	Oil pressure gauge, ampmeter, hourmeter, tachometer

PIONEER PRIME PRIMING SYSTEM

Priming System	Mechanically driven diaphragm-style vacuum pump
Air Removal Cap.	50 cfm (.02 cms)
Priming Chamber	Heavy-duty chamber w/no blow-by and stainless steel components
Discharge Check Valve	Elbow ball valve style w/cast iron body avoids clogs from passed-through solids
Run Dry System	Oil-lubricated mech. seal allows pump to run completely dry without damage

FEATURES AND BENEFITS

- Indefinite run-dry capability
- Extreme flow technology
- Environmentally safe priming system: Pioneer Prime
- Auto-start controls
- Skid options available

OPTIONS AND ACCESSORIES

Parts Kits No.	N/A
Instrument Compatibility	Transducer
Telemetry Ready	Options Available

PACKAGE SPECIFICATIONS

Fuel Capacity	75 gal (284 L)
Control Panel	LOFA CP750
Operating Speed (Min. / Max.)	1,000 / 2,100 rpm
Weight (Dry / Wet)	4,200 lbs / 4,725 lbs
Instrument Compatibility	High/low level floats
Trailer Brakes	Electric
Enclosure dB(A) Rating	69 dB(A) @ 26 feet (7 meters)
Optional Adders	Surge brakes, corner jacks, tongue-mounted tool box, wheel chocks, interior/exterior lighting, solar or 120VAC trickle charger, 120VAC inverter

MATERIALS OF CONSTRUCTION

Material	**Standard Construction**
Impeller	Ductile Iron 65-45-12
Shaft	17-4 PH Stainless Steel
Volute	Ductile Iron 65-45-12
Brac-Plate/Bracket	ASTM A48 Class 30/35 Cast Iron
Mechanical Seal	Silicon Carbide rotating and Tungsten Carbide stationary

Franklin Electric

PIONEER PUMP

MECHANICAL DIMENSIONS

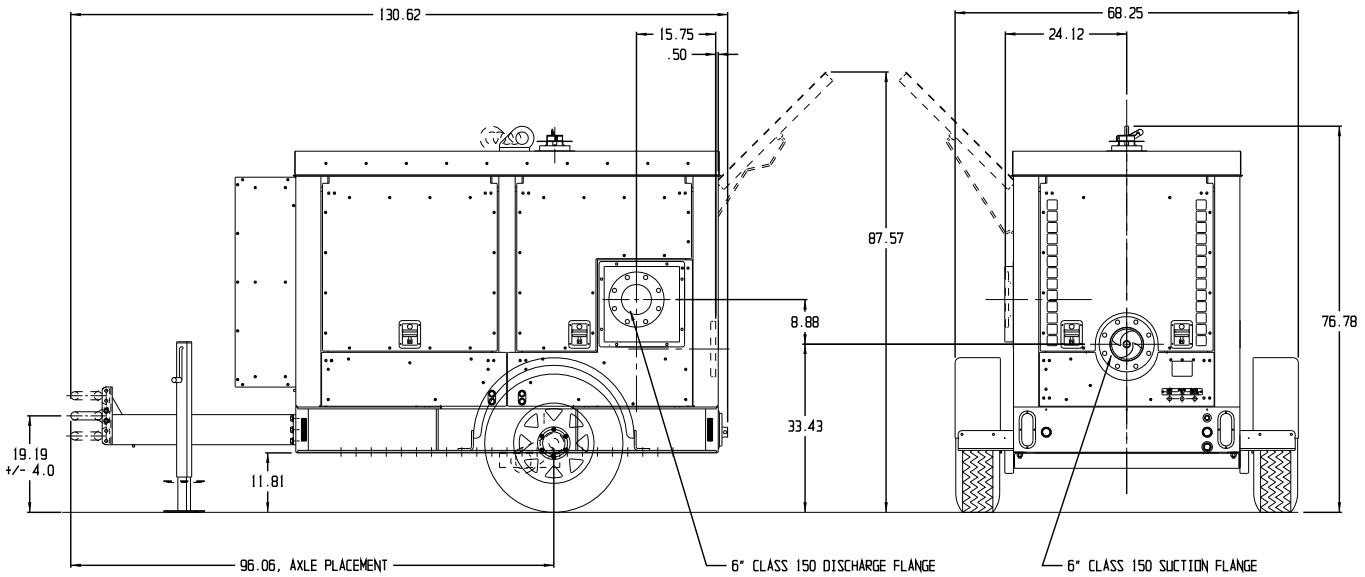

PERFORMANCE CURVE

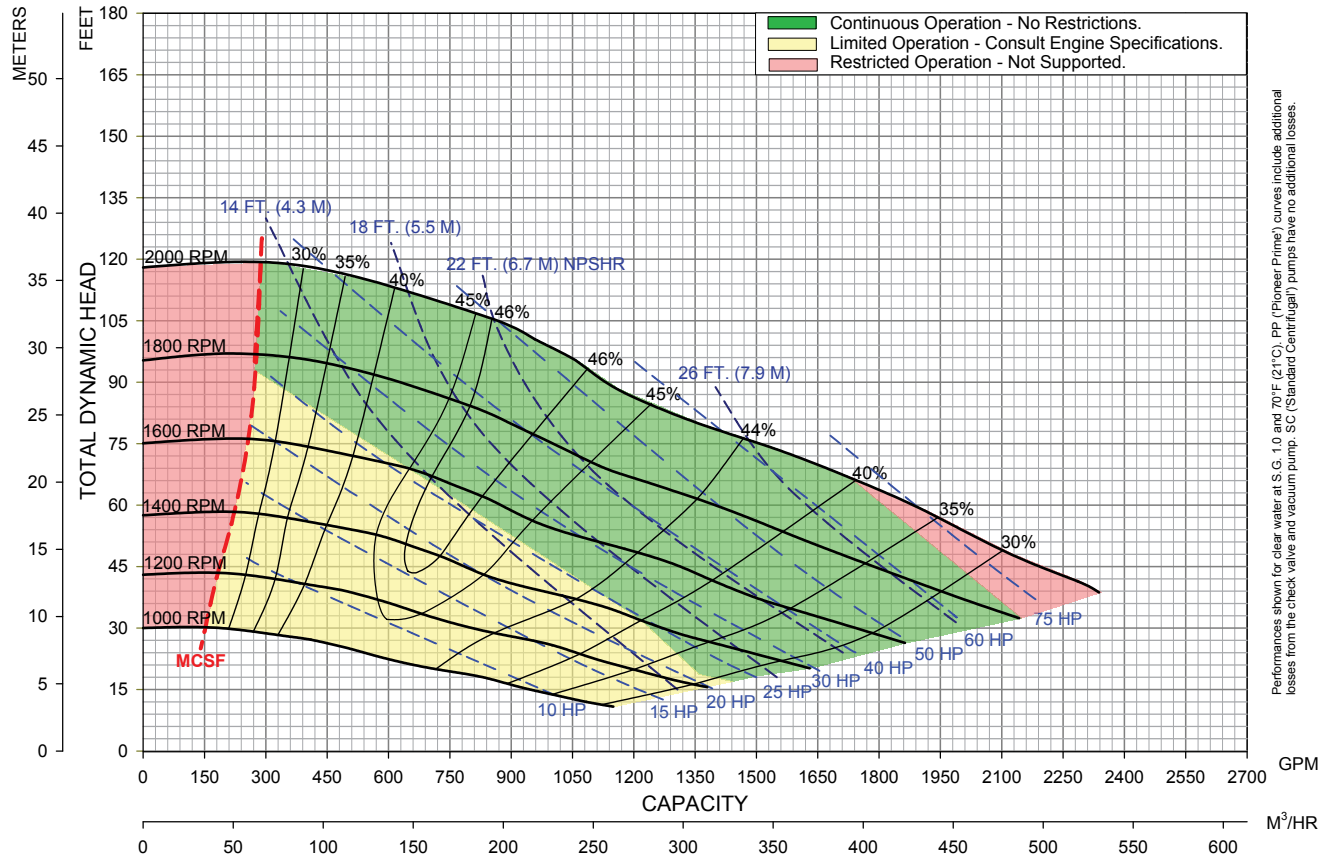

MENU

PIONEER PUMP

Pioneer Prime Sound Attenuated Diesel-Driven Centrifugal Pump Trailer Package

SAPP88S12L71-4045HFC04

PUMP SPECIFICATIONS

Size	8" x 8" (200 x 200 mm)
Impeller Diameter	12.25" (311 mm)
Max Flow	5,050 gpm (1,147 m^3/h)
Max Head	180 feet (55 meters)
Solids Size	3" (76 mm)
Max. Operating Temp.	200 °F (93 °C)
Max. Operating Press.	260 psi (1800 kPa)

ENGINE SPECIFICATIONS

FT4 Engine Type	John Deere 4045HFC04
Displacement	275 cu. in. (4.5 l)
Fuel Consumption	3.95 gph (15 l/h) @ 1800 rpm
Continuous HP	113 HP (84 kW) @ 1800 rpm
Peak HP Rating	139 HP (104 kW)
FT4 Specifics (Def or No Def, DOC, SCR, etc.)	DOC/ DPF, SCR
Safety Shut-Down Switches	Low oil press., high temp., v-belt failure
Instrument Panel	Oil pressure gauge, ampmeter, hourmeter, tachometer

PIONEER PRIME PRIMING SYSTEM

Priming System	Mechanically driven diaphragm-style vacuum pump
Air Removal Cap.	50 cfm (.02 cms)
Priming Chamber	Positive sealing air separation w/stainless steel components
Discharge Check Valve	Swing style; ductile iron w/nitrile disc
Run Dry System	Oil-lubricated mech. seal allows pump to run completely dry without damage

FEATURES AND BENEFITS

- Indefinite run-dry capability
- Extreme flow technology
- Environmentally safe priming system: Pioneer Prime
- Auto-start controls
- Skid options available

OPTIONS AND ACCESSORIES

Parts Kits No.	Mechanical Seal Kit: 372000101 | Bearing Frame Kit: 37300100
Instrument Compatibility	Transducer
Telemetry Ready	Options Available

PACKAGE SPECIFICATIONS

Fuel Capacity	135 gal (511 L)
Control Panel	LOFA CP750
Operating Speed (Min. / Max.)	1,100 / 2,000 rpm
Weight (Dry / Wet)	5,700 lbs / 6,459 lbs
Instrument Compatibility	High/low level floats
Trailer Brakes	Electric
Enclosure dB(A) Rating	69 dB(A) @ 26 feet (7 meters)
Optional Adders	Surge brakes, corner jacks, tongue-mounted tool box, wheel chocks, interior/exterior lighting, solar or 120VAC trickle charger, 120VAC inverter

MATERIALS OF CONSTRUCTION

Material	**Standard Construction**
Impeller	CA6NM Stainless Steel
Shaft	17-4 PH Stainless Steel
Wear Ring	ASTM A48 Class 40 Gray Iron
Suction Cover	Ductile Iron ASTM A536 65-45-12
Volute	Ductile Iron ASTM A536 65-45-12
Brac-Plate/Bracket	Ductile Iron ASTM A536 65-45-12
Mechanical Seal	Silicon Carbide rotating and Tungsten Carbide stationary

Franklin Electric

PIONEER PUMP

MECHANICAL DIMENSIONS

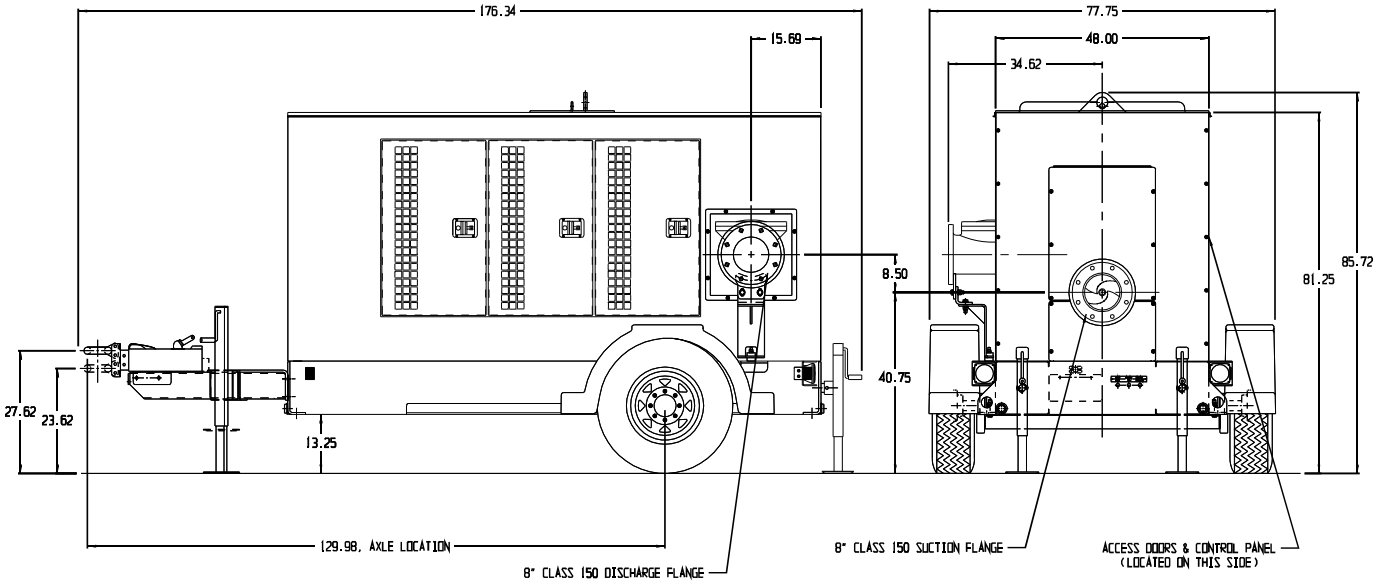

PERFORMANCE CURVE

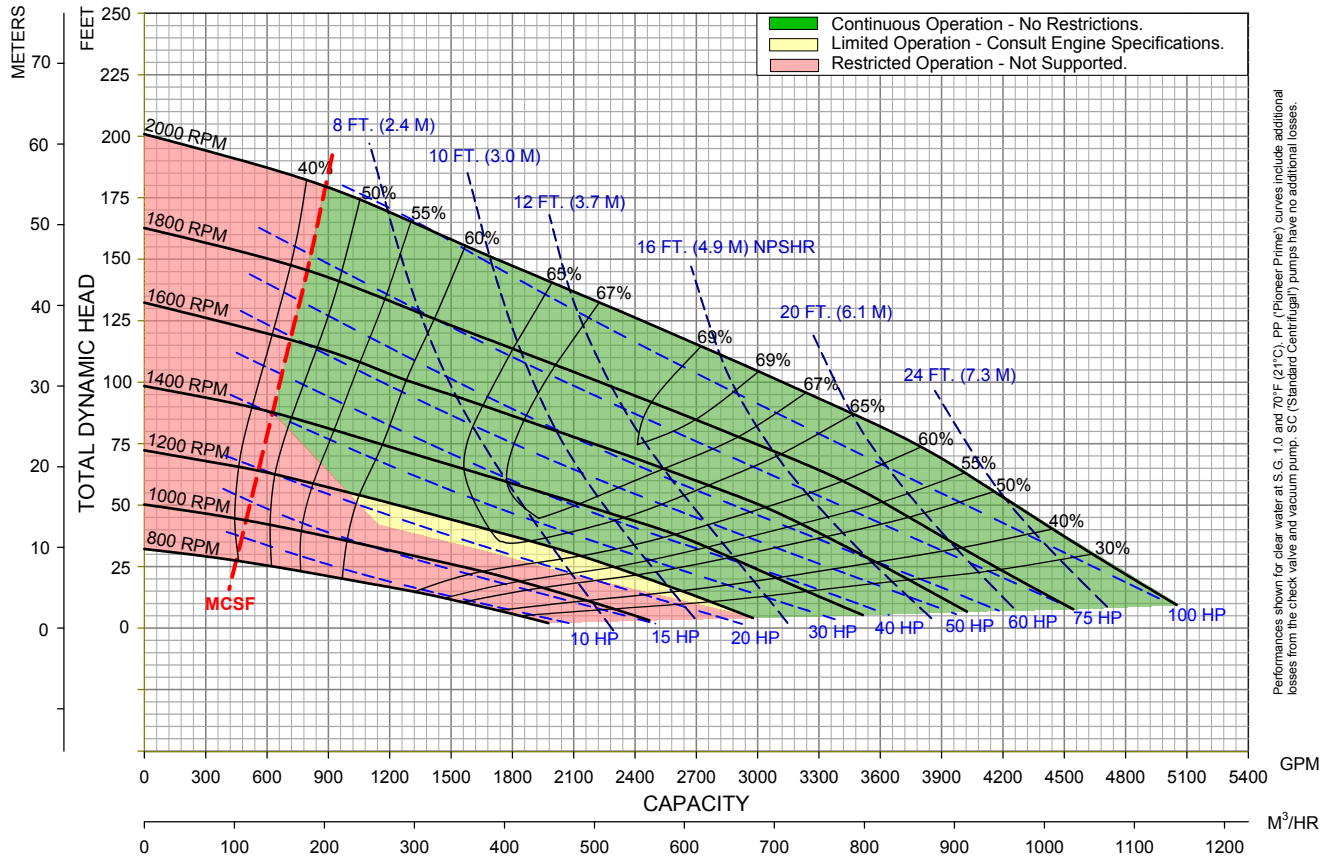

MENU

PIONEER PUMP

Pioneer Prime Sound Attenuated Diesel-Driven Centrifugal Pump Trailer Package

SAPP1212S17L71-1706J-E93TA

PUMP SPECIFICATIONS

Size	12" x 12" (300 x 300 mm)
Impeller Diameter	17.25" (438 mm)
Max Flow	8,950 gpm (2,033 m^3/h)
Max Head	240 feet (73 meters)
Solids Size	3.6" (90 mm)
Max. Operating Temp.	200 °F (93 °C)
Max. Operating Press.	260 psi (1800 kPa)

ENGINE SPECIFICATIONS

FT4 Engine Type	1706J-E93TA - 335 HP
Displacement	550 cu. in. (9.3 l)
Fuel Consumption	19.7 gph (74.4 l/h) @ 1800 rpm
Continuous HP	335 HP (250 kW) @ 1800 rpm
Peak HP Rating	450 HP (335 kW)
FT4 Specifics (Def or No Def, DOC, SCR, etc.)	DOC/DPF, SCR, EGR
Safety Shut-Down Switches	Low oil press., high temp., v-belt failure
Instrument Panel	Oil pressure gauge, ampmeter, hourmeter, tachometer

PIONEER PRIME PRIMING SYSTEM

Priming System	Mechanically driven diaphragm-style vacuum pump
Air Removal Cap.	50 cfm (.02 cms)
Priming Chamber	Positive sealing air separation w/stainless steel components
Discharge Check Valve	Ductile iron body; swing flex nitrile rubber flapper
Run Dry System	Oil-lubricated mech. seal allows pump to run completely dry without damage

FEATURES AND BENEFITS

- Indefinite run-dry capability
- Extreme flow technology
- Environmentally safe priming system: Pioneer Prime
- Auto-start controls
- Skid options available

OPTIONS AND ACCESSORIES

Parts Kits No.	Mechanical Seal Kit: 372000149 | Bearing Frame Kit: 373000135
Instrument Compatibility	Transducer
Telemetry Ready	Options Available

PACKAGE SPECIFICATIONS

Fuel Capacity	210 gal
Control Panel	LOFA CP750
Operating Speed (Min. / Max.)	1,200 / 1,800 rpm
Instrument Compatibility	High/low level floats
Trailer Brakes	Electric
Enclosure dB(A) Rating	69 dB(A) @ 26 feet (7 meters)
Optional Adders	Surge brakes, corner jacks, tongue-mounted tool box, wheel chocks, interior/exterior lighting, solar or 120VAC trickle charger, 120VAC inverter

MATERIALS OF CONSTRUCTION

Material	**Standard Construction**
Impeller	CA6NM Stainless Steel
Shaft	17-4 PH Stainless Steel
Wear Ring	ASTM A48 Class 40 Gray Iron
Suction Cover	Ductile Iron ASTM A536 65-45-12
Volute	Ductile Iron ASTM A536 65-45-12
Brac-Plate/Bracket	Ductile Iron ASTM A536 65-45-12
Mechanical Seal	Silicon Carbide rotating and Tungsten Carbide stationary

Franklin Electric

PIONEER PUMP

MECHANICAL DIMENSIONS

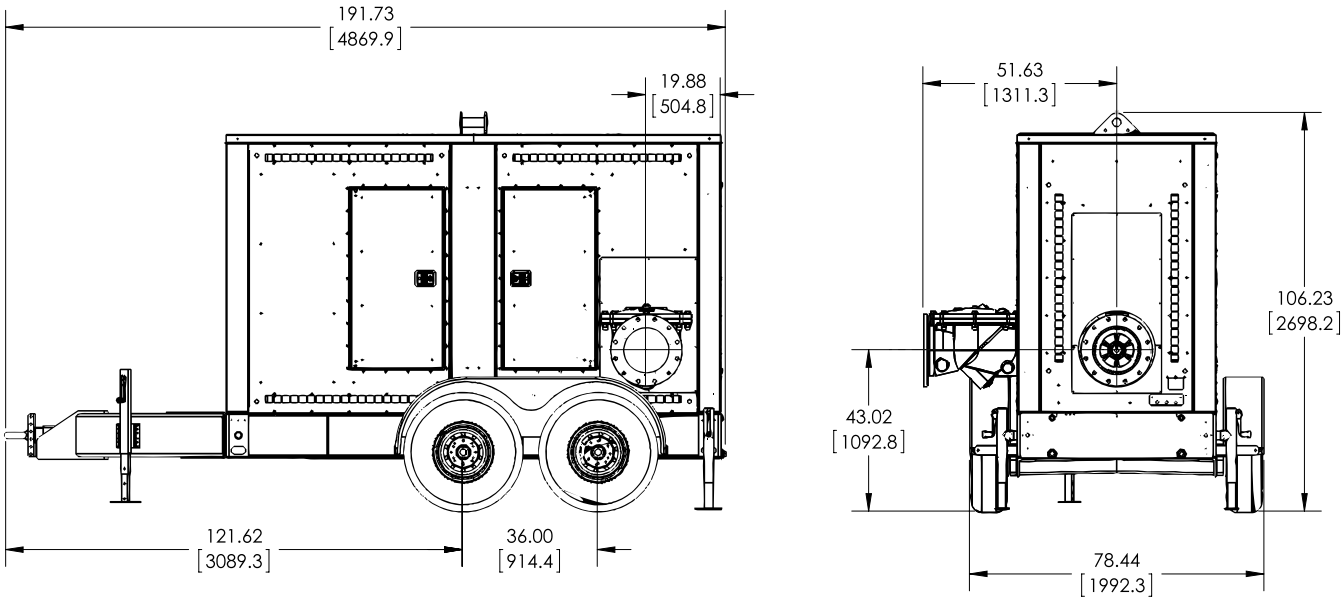

PERFORMANCE CURVE

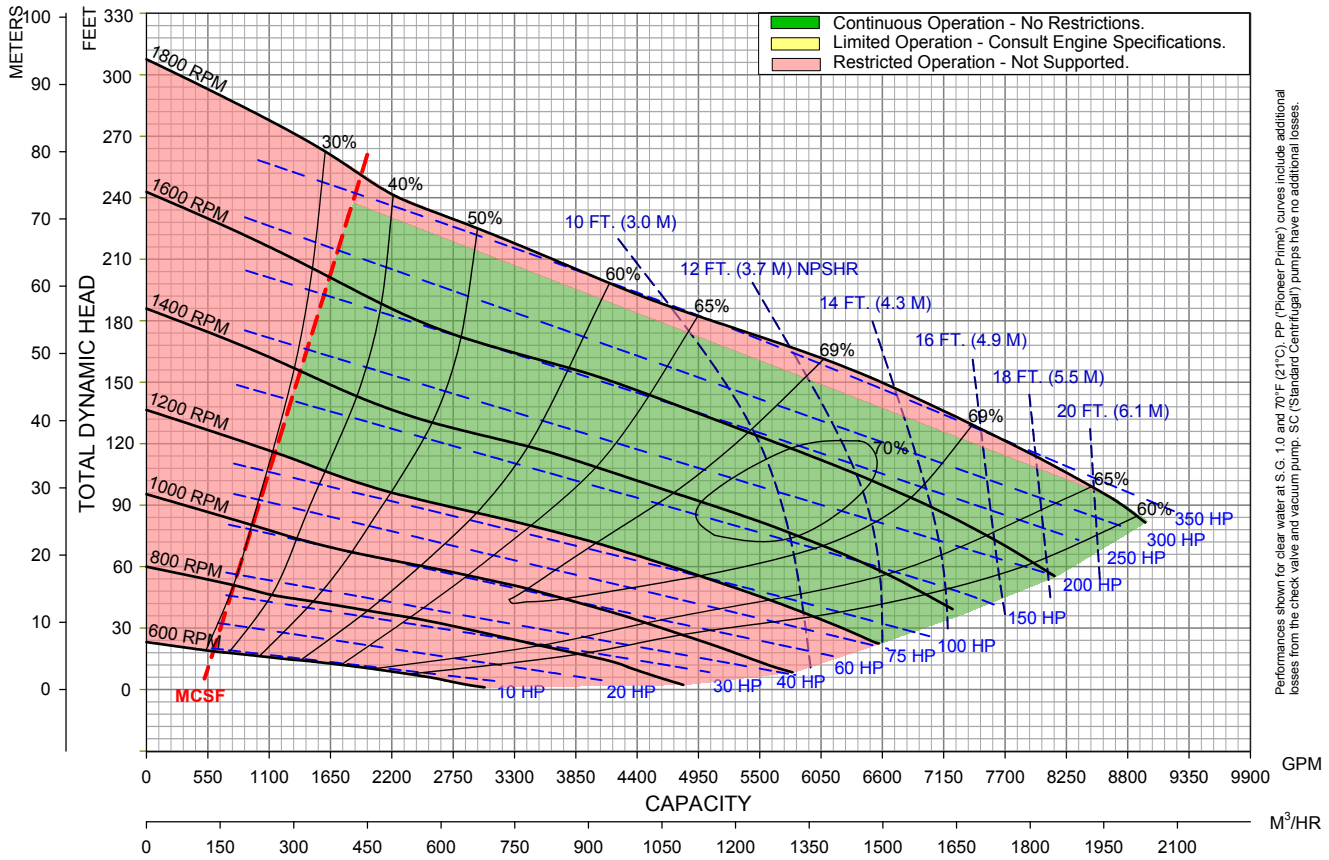

Performances shown for clear water at S.G. 1.0 and 70°F (21°C). PP ('Pioneer Prime') curves include additional losses from the check valve and vacuum pump. SC ('Standard Centrifugal') pumps have no additional losses.

MENU

PIONEER PUMP

Pioneer Prime Sound Attenuated Diesel-Driven Centrifugal Pump Package

SAPP1414S17L71-1706J-E93TA

PUMP SPECIFICATIONS

Size	14" x 14" (360 x 360 mm)
Impeller Diameter	17.5" (445 mm)
Max Flow	11,295 gpm (2,565 m^3/h)
Max Head	185 feet (56 meters)
Solids Size	4" (100 mm)
Max. Operating Temp.	200 °F (93 °C)
Max. Operating Press.	260 psi (1800 kPa)

ENGINE SPECIFICATIONS

FT4 Engine Type	Perkins 1706J-E93TA
Displacement	550 cu. in. (9.3 l)
Fuel Consumption	19.7 gph (74.4 l/h) @ 1800 rpm
Continuous HP	335 HP (250 kW) @ 1800 rpm
Peak HP Rating	450 HP (335 kW)
FT4 Specifics (Def or No Def, DOC, SCR, etc.)	DOC/DPF, SCR, EGR
Safety Shut-Down Switches	Low oil press., high temp., v-belt failure
Instrument Panel	Oil pressure gauge, ampmeter, hourmeter, tachometer

PIONEER PRIME PRIMING SYSTEM

Priming System	Mechanically driven diaphragm-style vacuum pump
Air Removal Cap.	50 cfm (.02 cms)
Priming Chamber	Positive sealing air separation w/stainless steel components
Discharge Check Valve	Swing style ductile iron w/nitrile disc
Run Dry System	Oil-lubricated mech. seal allows pump to run completely dry without damage

FEATURES AND BENEFITS

- Indefinite run-dry capability
- Extreme flow technology
- Environmentally safe priming system: Pioneer Prime
- Auto-start controls
- Trailer options available

OPTIONS AND ACCESSORIES

Parts Kits No.	Mechanical Seal Kit: 372000126 | Bearing Frame Kit: 373000122
Instrument Compatibility	Transducer
Telemetry Ready	Options Available

PACKAGE SPECIFICATIONS

Fuel Capacity	310 gal
Control Panel	LOFA CP750
Operating Speed (Min. / Max.)	700 / 1,450 rpm
Instrument Compatibility	High/low level floats
Enclosure dB(A) Rating	69 dB(A) @ 26 feet (7 meters)
Optional Adders	Interior/exterior lighting, solar or 120VAC trickle charger, 120VAC inverter

MATERIALS OF CONSTRUCTION

Material	**Standard Construction**
Impeller	CA6NM Stainless Steel
Shaft	17-4 PH Stainless Steel
Wear Ring	ASTM A48 Class 40 Gray Iron
Suction Cover	Ductile Iron ASTM A536 65-45-12
Volute	Ductile Iron ASTM A536 65-45-12
Brac-Plate/Bracket	Ductile Iron ASTM A536 65-45-12
Mechanical Seal	Silicon Carbide rotating and Tungsten Carbide stationary

Franklin Electric

PIONEER PUMP

MECHANICAL DIMENSIONS

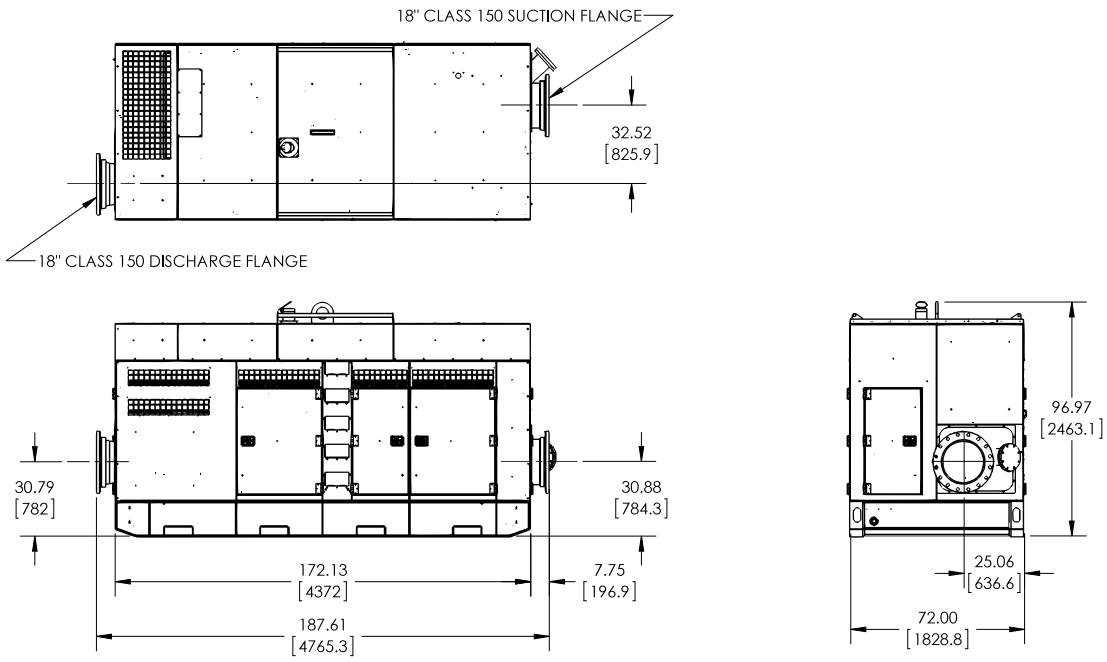

PERFORMANCE CURVE

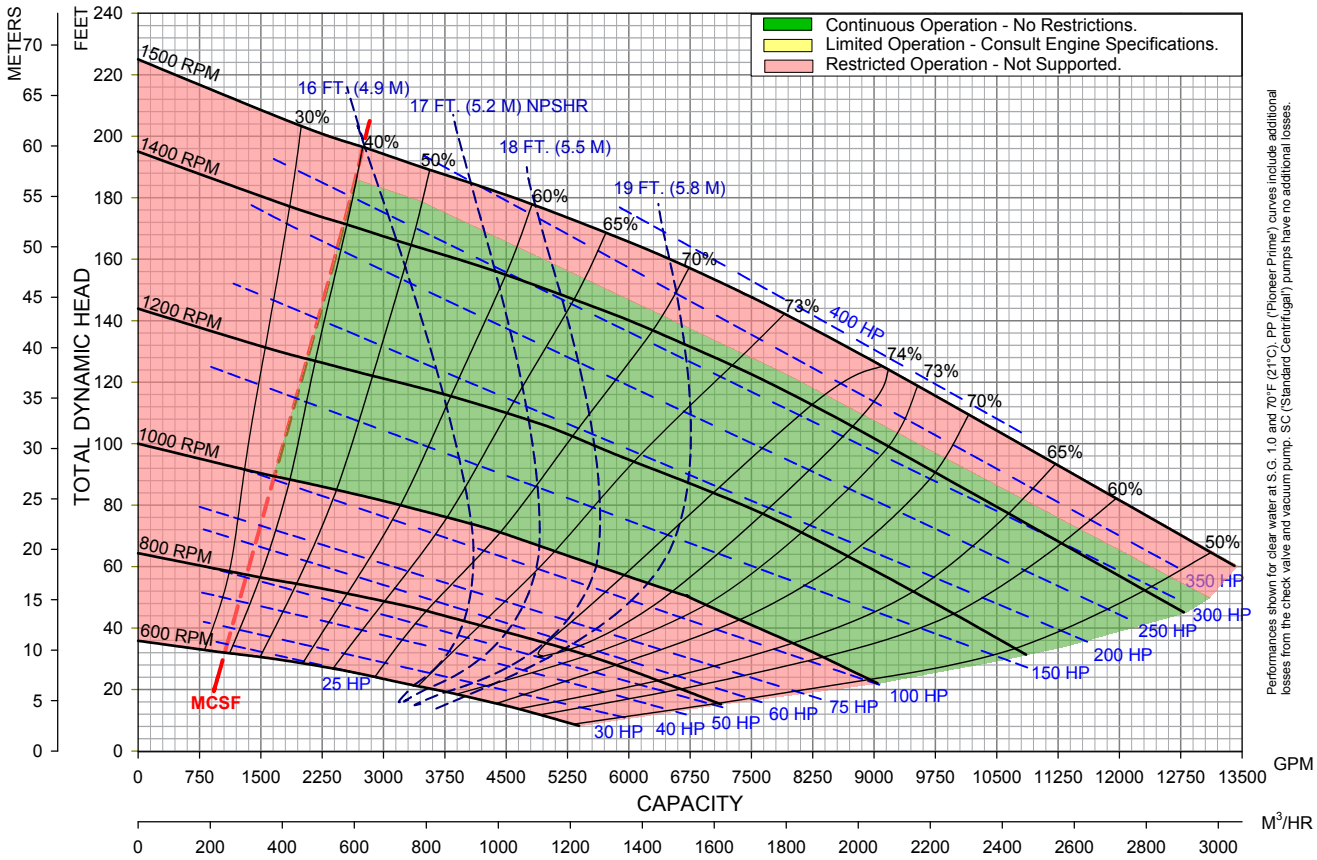

MENU

PIONEER PUMP

Pioneer Prime Sound Attenuated Diesel-Driven Centrifugal Pump Package

SAPP1414S17L71-1206F-E70TTA

PUMP SPECIFICATIONS

Size	14" x 14" (360 x 360 mm)
Impeller Diameter	17.5" (445 mm)
Max Flow	10,540 gpm (2,394 m^3/h)
Max Head	128 feet (39 meters)
Solids Size	4" (100 mm)
Max. Operating Temp.	200 °F (93 °C)
Max. Operating Press.	260 psi (1800 kPa)

ENGINE SPECIFICATIONS

FT4 Engine Type	Perkins 1206F-E70TTA - 242 HP
Displacement	428 cu. in. (7 l)
Fuel Consumption	14.3 gph (54.2 l/h) @ 1800 rpm
Continuous HP	202 HP (151 kW) @ 1800 rpm
Peak HP Rating	301 HP (225 kW)
FT4 Specifics (Def or No Def, DOC, SCR, etc.)	DOC/DPF, SCR
Safety Shut-Down Switches	Low oil press., high temp., v-belt failure
Instrument Panel	Oil pressure gauge, ampmeter, hourmeter, tachometer

PIONEER PRIME PRIMING SYSTEM

Priming System	Mechanically driven diaphragm-style vacuum pump
Air Removal Cap.	50 cfm (.02 cms)
Priming Chamber	Positive sealing air separation w/stainless steel components
Discharge Check Valve	Swing style; ductile iron w/nitrile disc
Run Dry System	Oil-lubricated mech. seal allows pump to run completely dry without damage

FEATURES AND BENEFITS

- Indefinite run-dry capability
- Extreme flow technology
- Environmentally safe priming system: Pioneer Prime
- Auto-start controls
- Trailer options available

OPTIONS AND ACCESSORIES

Parts Kits No.	Mechanical Seal Kit: 372000126 | Bearing Frame Kit: 373000122
Instrument Compatibility	Transducer
Telemetry Ready	Options Available

PACKAGE SPECIFICATIONS

Fuel Capacity	310 gal
Control Panel	LOFA CP750
Operating Speed (Min. / Max.)	800 / 1,200 rpm
Instrument Compatibility	High/low level floats
Enclosure dB(A) Rating	69 dB(A) @ 26 feet (7 meters)
Optional Adders	Interior/exterior lighting, solar or 120VAC trickle charger, 120VAC inverter

MATERIALS OF CONSTRUCTION

Material	**Standard Construction**
Impeller	CA6NM Stainless Steel
Shaft	17-4 PH Stainless Steel
Wear Ring	ASTM A48 Class 40 Gray Iron
Suction Cover	Ductile Iron ASTM A536 65-45-12
Volute	Ductile Iron ASTM A536 65-45-12
Brac-Plate/Bracket	Ductile Iron ASTM A536 65-45-12
Mechanical Seal	Silicon Carbide rotating and Tungsten Carbide stationary

Franklin Electric

PIONEER PUMP

MECHANICAL DIMENSIONS

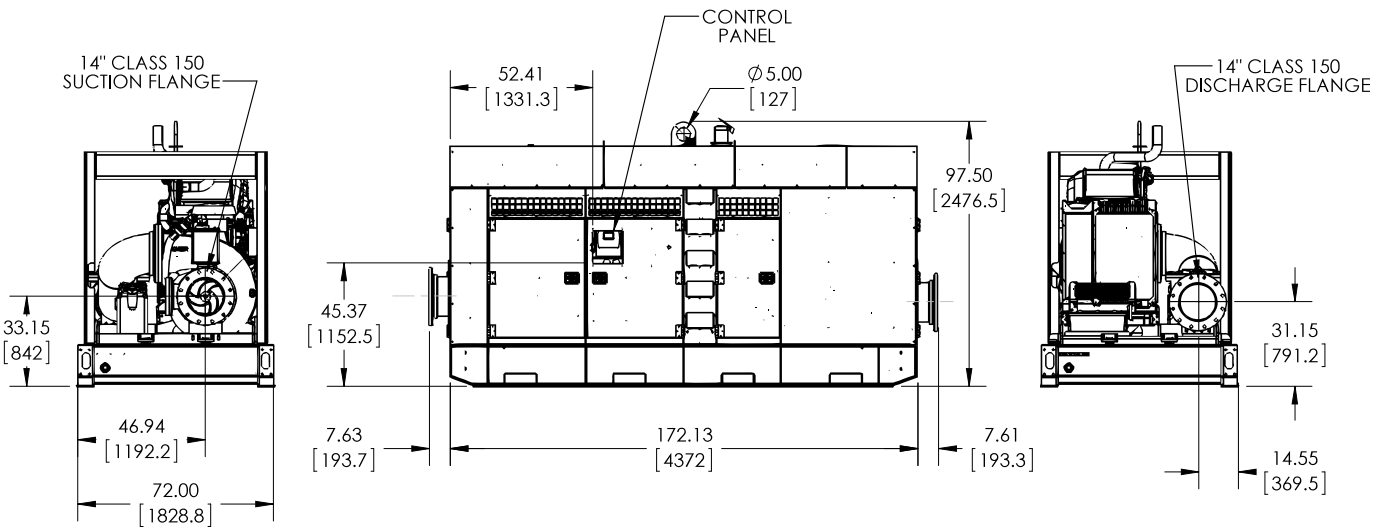

PERFORMANCE CURVE

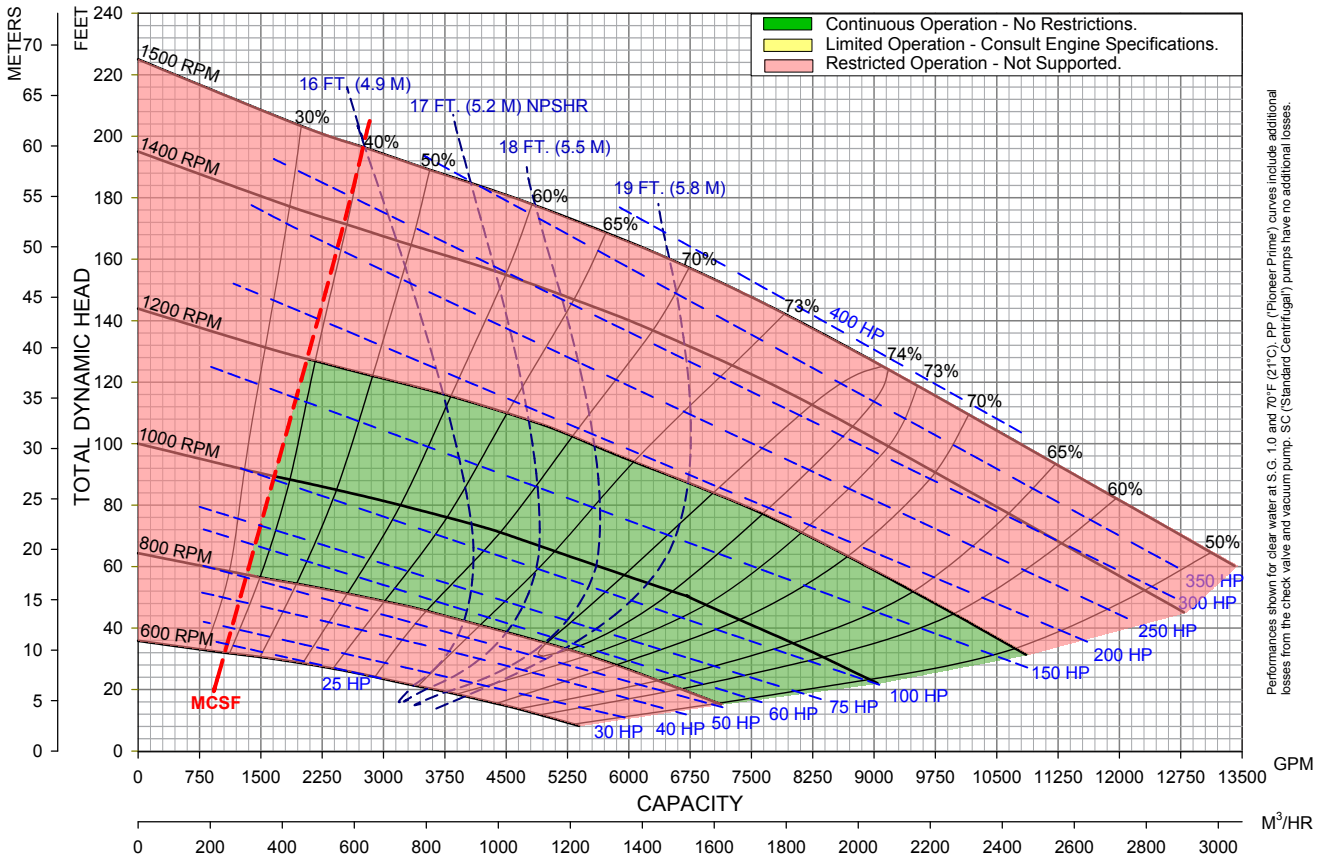

NOTES

NOTES

NOTES

Franklin Electric